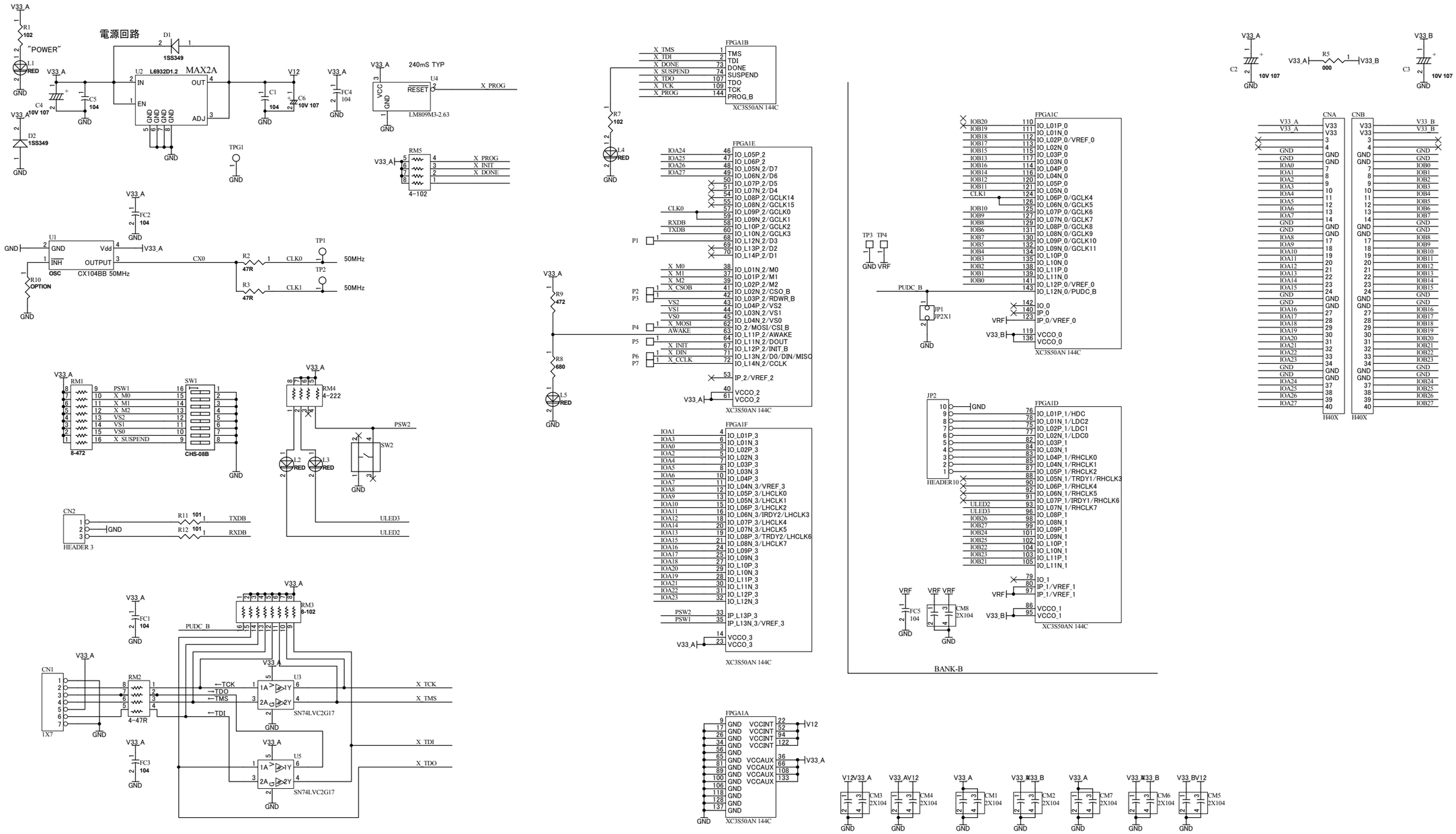

HuMANDATA	2008/06/05	SP3AN VQ144 FPGA BOARD	
HuMANDATA LTD. OSAKA JAPAN www.hdl.co.jp		DOC. No. XCM-303	B
Date: 5-Jun-2008 14:45:45	File: XCM303B.sch	Sheet 1 of 1	