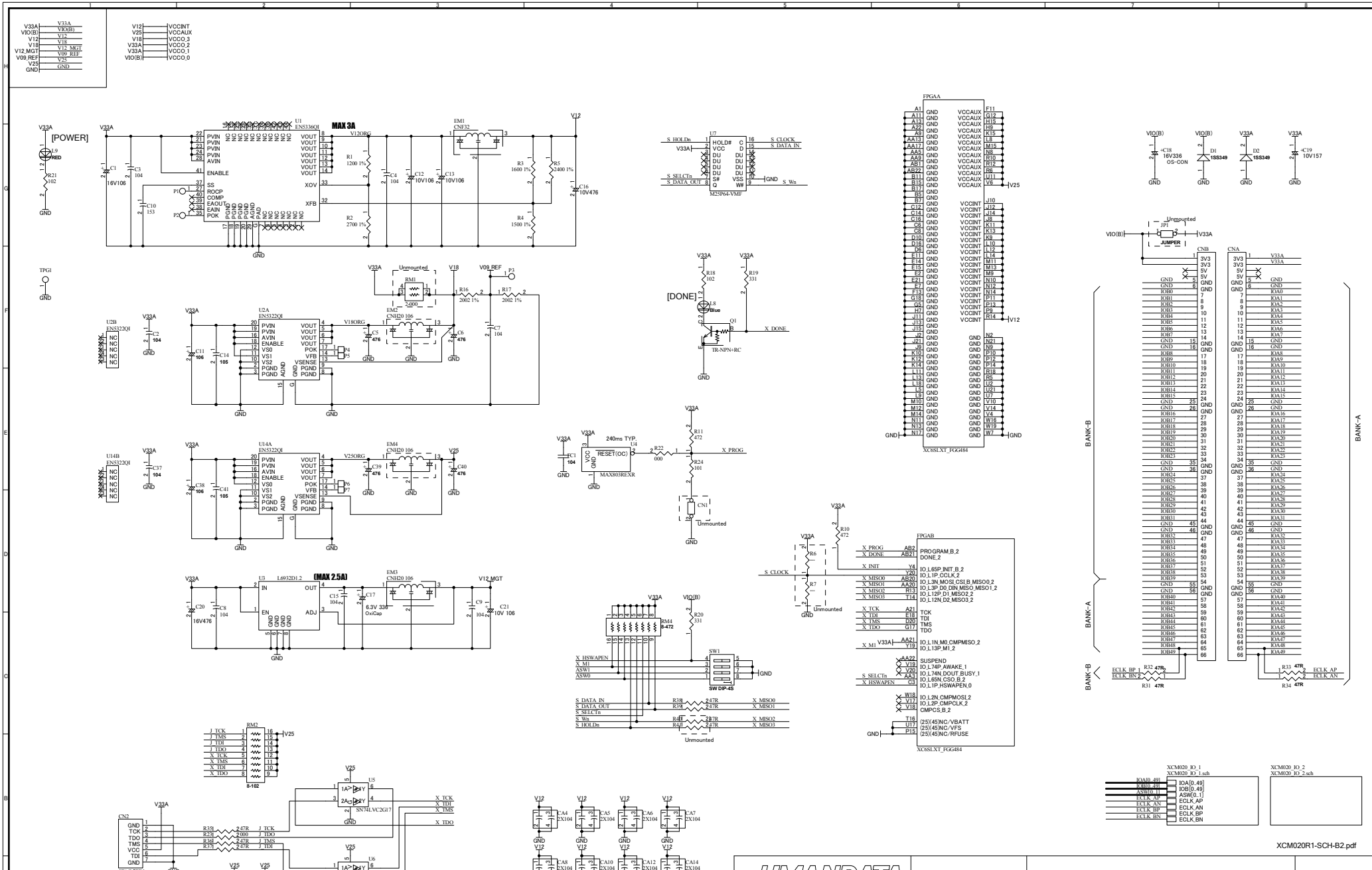
[POWER]
MAX 3A
U1 EN5336QI
U2A EN5322QI
U2B EN5322QI
U14A EN5322QI
U14B EN5322QI
(MAX 2.5A)
U3 L6932D1.2
FPGAA
XC6SLXT_FGG484
FPGAB
XC6SLXT_FGG484
U7 M25P64-VMF
[DONE]
TR-NPN+RC
U4 MAX803REXR
240ms TYP.
RESET(OC)
X_PROG
S_CLOCK
S_HOLDn
S_SELCTn
S_DATA_OUT
S_DATA_IN
S_Wn
X_DONE
X_HSWAPEN
X_M1
ASW1
ASW0
SW DIP-4S
RM4 8-472
RM2 8-102
U5 SN74LVC2G17
U6 SN74LVC2G17
CN2
JTAG 7PIN
JTAG
X_TCK
X_TDI
X_TMS
X_TDO
X_MISO0
X_MISO1
X_MISO2
X_MISO3
CNB
CNA
BANK-A
BANK-B
ECLK_BP
ECLK_BN
ECLK_AP
ECLK_AN
XCM020_IO_1
XCM020_IO_1.sch
XCM020_IO_2
XCM020_IO_2.sch
XCM020R1-SCH-B2.pdf
HUMANDATA
HuMANDATA LTD.
OSAKA JAPAN
www.hdl.co.jp/en/(Global)
www.hdl.co.jp/(Japan)
Spartan-6 LXT FGG484 FPGA Board
DOC. No. XCM-020
B2
Date: 25-Apr-2012 13:03:45
File: XCM020B.sch
Sheet 1 of 3

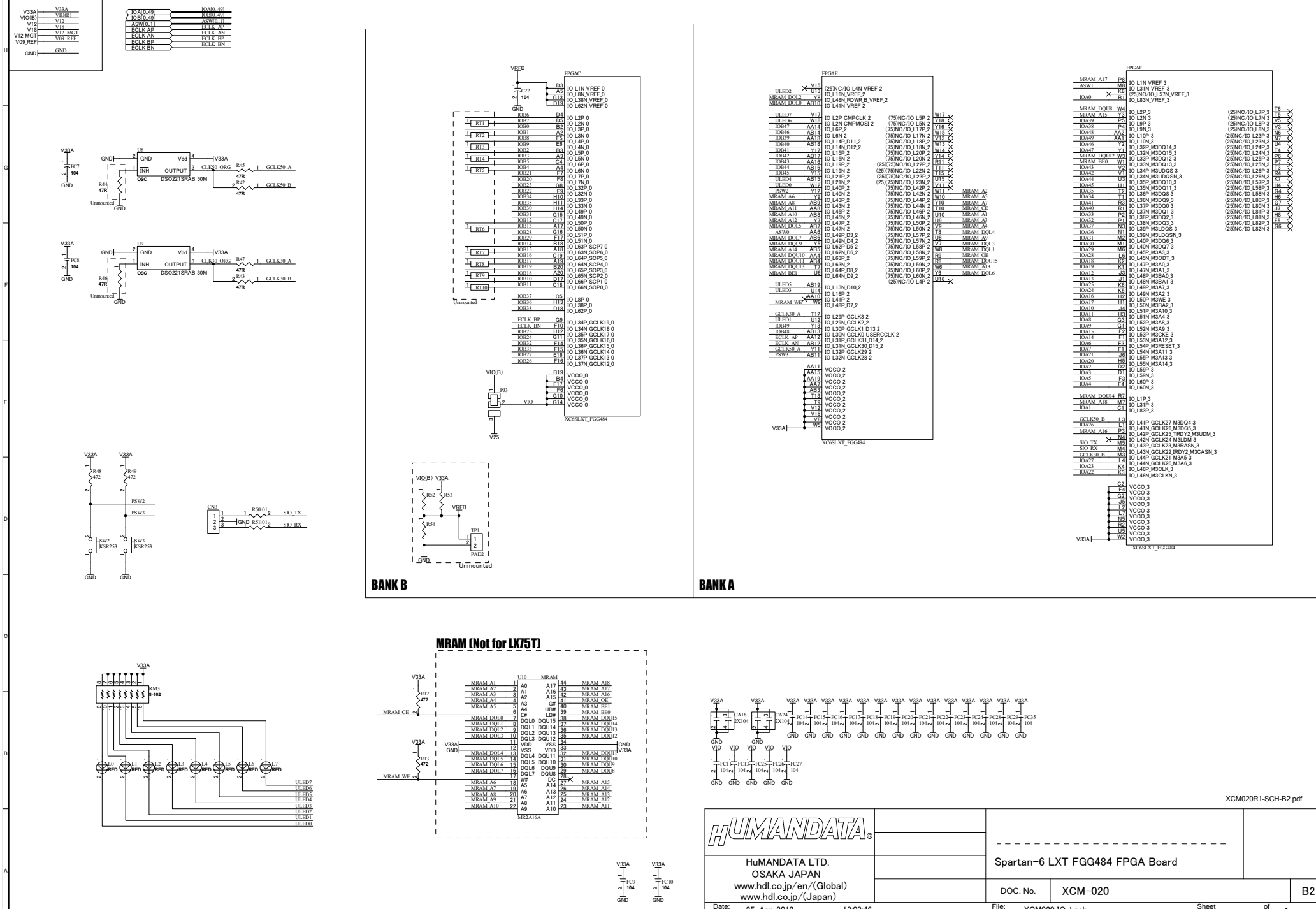
BANK B
BANK A
MRAM (Not for LX75T)
FPGAC
FPGAE
FPGAF
XC6SLXT_FGG484
DSO221SRAB 50M
DSO221SRAB 30M
Unmounted
XCM020R1-SCH-B2.pdf
HUMANDATA
HuMANDATA LTD.
OSAKA JAPAN
www.hdl.co.jp/en/(Global)
www.hdl.co.jp/(Japan)
Spartan-6 LXT FGG484 FPGA Board
DOC. No.
XCM-020
B2
Date: 25-Apr-2012 13:03:46
File: XCM020_IO_1.sch
Sheet 2 of 3

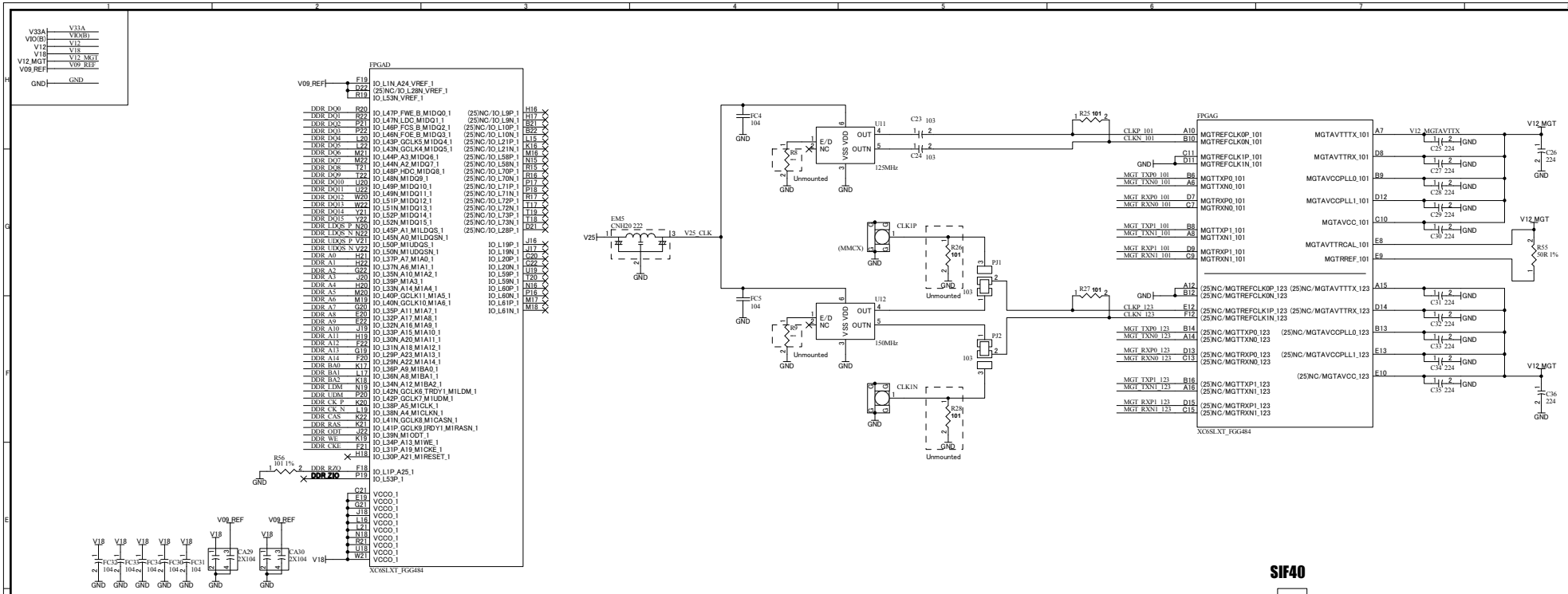

SIF40

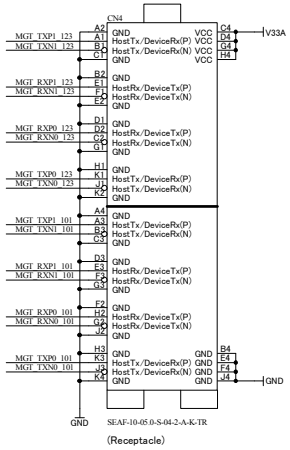

DDR2SDRAM

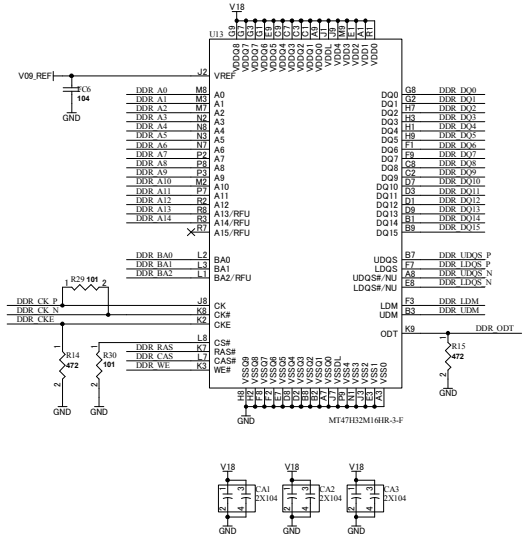

XCM020R1-SCH-B2.pdf

HuMANDATA LTD. OSAKA JAPAN www.hdl.co.jp/en/(Global) www.hdl.co.jp/(Japan)		Spartan-6 LXT FGG484 FPGA Board	
		DOC. No. XCM-020	B2
Date: 25-Apr-2012 13:03:46		File: XCM020_IO_2.sch	Sheet 3 of 3