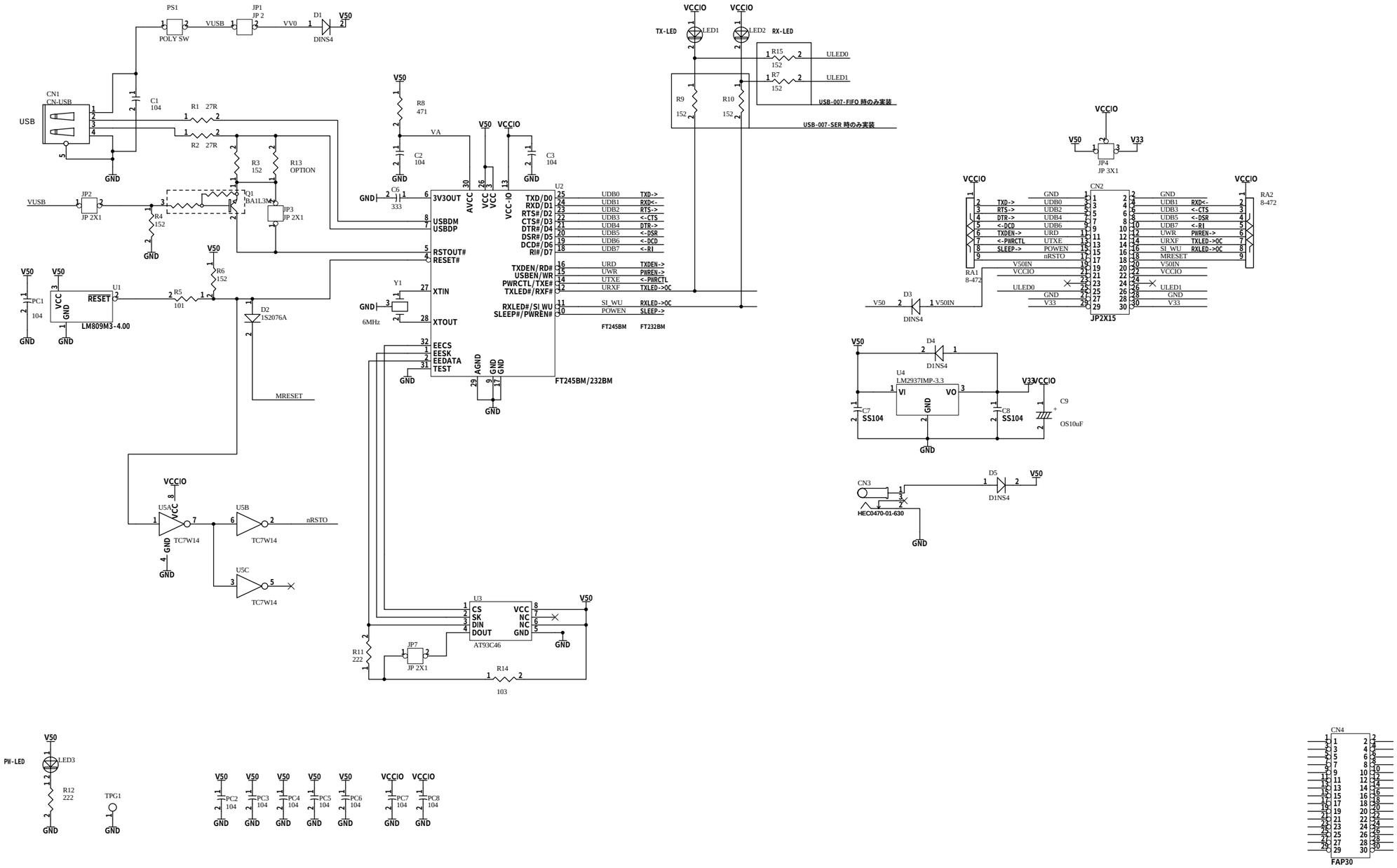

HuMANDATA LTD.
OSAKA JAPAN
www.hdl.co.jp

USB-007-FIFO / USB-007-SER

DOC. No. USB-007 C

Date: 26-Apr-2004 16:13:25 File: USB007C.sch Sheet 1 of 1