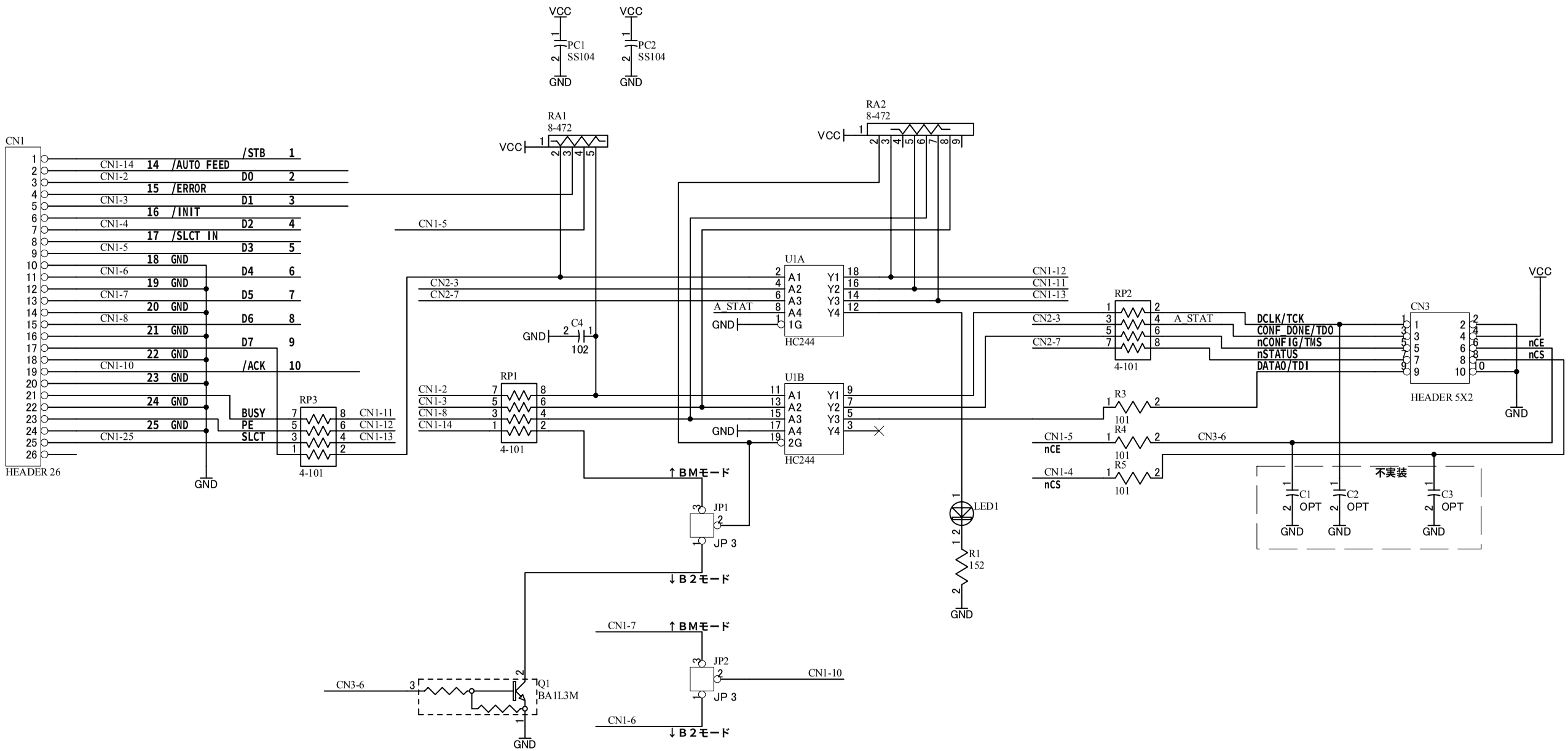

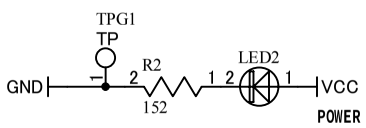

POWER LED

HUMANDATA		BLKIT(REV2)	
HuMANDATA LTD. OSAKA JAPAN www.hdl.co.jp		DOC. No. DLC-005	A
Date: 17-Oct-2003 17:33:25	File: DLC005A.sch	Sheet 1	of 1