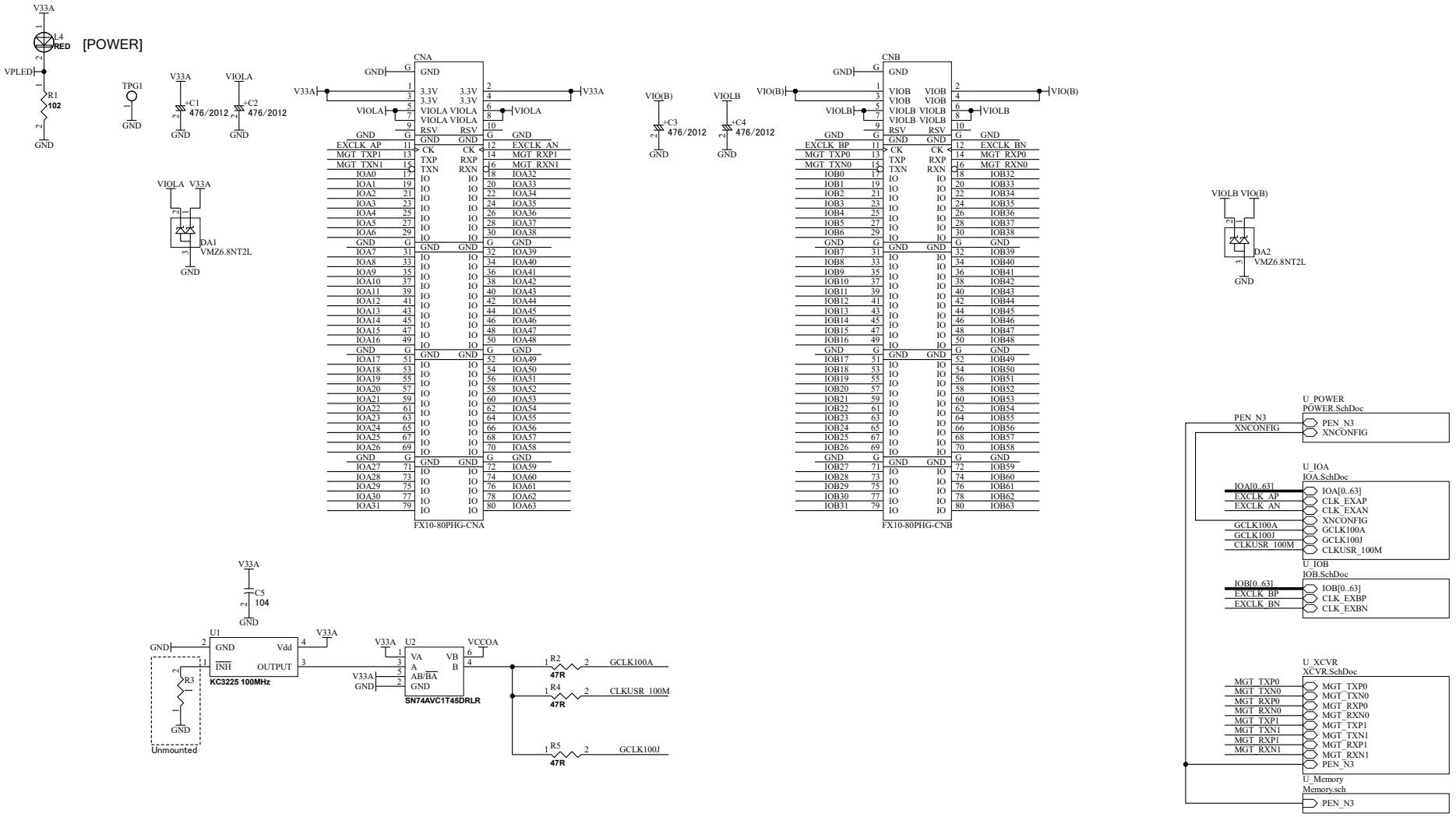

ACM115LR2-SCH-E.pdf

HuMANDATA LTD.
www.hdl.co.jp/ (Japan)
www2.hdl.co.jp/en/ (Global)

DSN:	
TITLE:	Intel Cyclone 10 GX F672 FPGA Board
DOC. No:	ACM-115L E
FILE: ACM115LE.SchDoc	DATE: 2023/10/26 11:07:16 Sheet: 1 / 6

V6_20191224

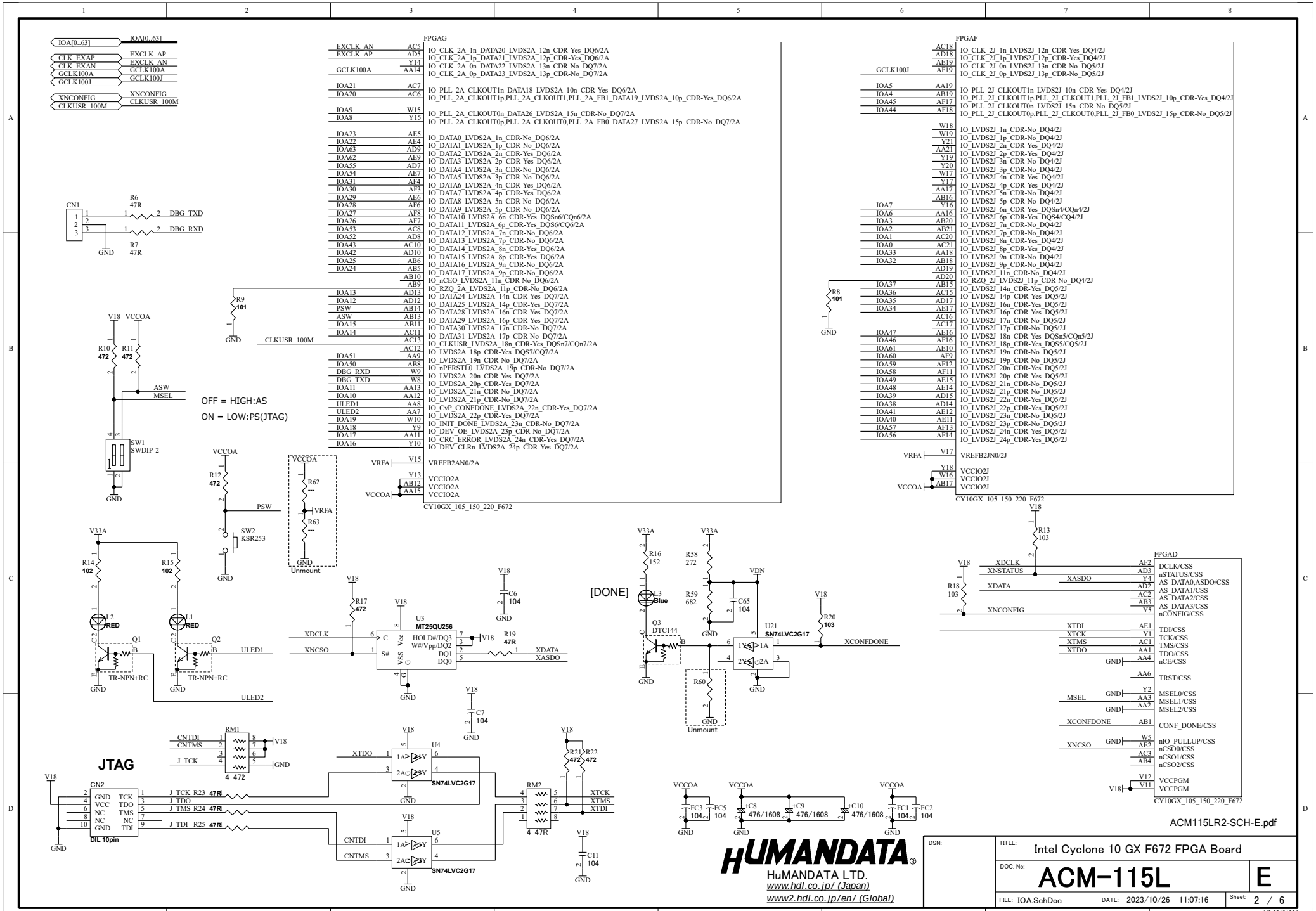
FPGAG
CY10GX_105_150_220_F672
FPGAF
CY10GX_105_150_220_F672
FPGAD
CY10GX_105_150_220_F672
IOA[0..63]
CLK_EXAP
CLK_EXAN
GCLK100A
GCLK100J
XNCONFIG
CLKUSR_100M
CN1
R6 47R
R7 47R
DBG_TXD
DBG_RXD
GND
R9 101
R8 101
V18 VCCOA
R10 472
R11 472
ASW
MSEL
SW1 SWDIP-2
OFF = HIGH:AS
ON = LOW:PS(JTAG)
R12 472
PSW
SW2 KSR253
R62 ---
R63 ---
VRFA
Unmount
V33A
R14 102
R15 102
L2 RED
L1 RED
Q1
Q2
TR-NPN+RC
ULED1
ULED2
R17 472
U3 MT25QU256
HOLD#/DQ3
W#/Vpp/DQ2
DQ1
DQ0
XDCLK
XNCSO
R19 47R
XDATA
XASDO
C6 104
C7 104
[DONE]
L3 Blue
Q3 DTC144
R16 152
R58 272
R59 682
C65 104
R60 ---
VDN
U21 SN74LVC2G17
R20 103
XCONFDONE
R13 103
R18 103
XDCLK
XNSTATUS
XASDO
XDATA
XNCONFIG
XTDI
XTCK
XTMS
XTDO
MSEL
XCONFDONE
XNCSO
DCLK/CSS
nSTATUS/CSS
AS_DATA0,ASDO/CSS
AS_DATA1/CSS
AS_DATA2/CSS
AS_DATA3/CSS
nCONFIG/CSS
TDI/CSS
TCK/CSS
TMS/CSS
TDO/CSS
nCE/CSS
TRST/CSS
MSEL0/CSS
MSEL1/CSS
MSEL2/CSS
CONF_DONE/CSS
nIO_PULLUP/CSS
nCSO0/CSS
nCSO1/CSS
nCSO2/CSS
VCCPGM
JTAG
RM1 4-472
CNTDI
CNTMS
J_TCK
CN2
DIL 10pin
J_TCK R23 47R
J_TDO
J_TMS R24 47R
J_TDI R25 47R
U4 SN74LVC2G17
U5 SN74LVC2G17
RM2 4-47R
R21 472
R22 472
C11 104
FC3 104
FC5 104
C8 476/1608
C9 476/1608
C10 476/1608
FC1 104
FC2 104
ACM115LR2-SCH-E.pdf
HUMANDATA
HuMANDATA LTD.
www.hdl.co.jp/ (Japan)
www2.hdl.co.jp/en/ (Global)
DSN:
TITLE: Intel Cyclone 10 GX F672 FPGA Board
DOC. No: ACM-115L
E
FILE: IOA.SchDoc
DATE: 2023/10/26 11:07:16
Sheet: 2 / 6
V6_20191224

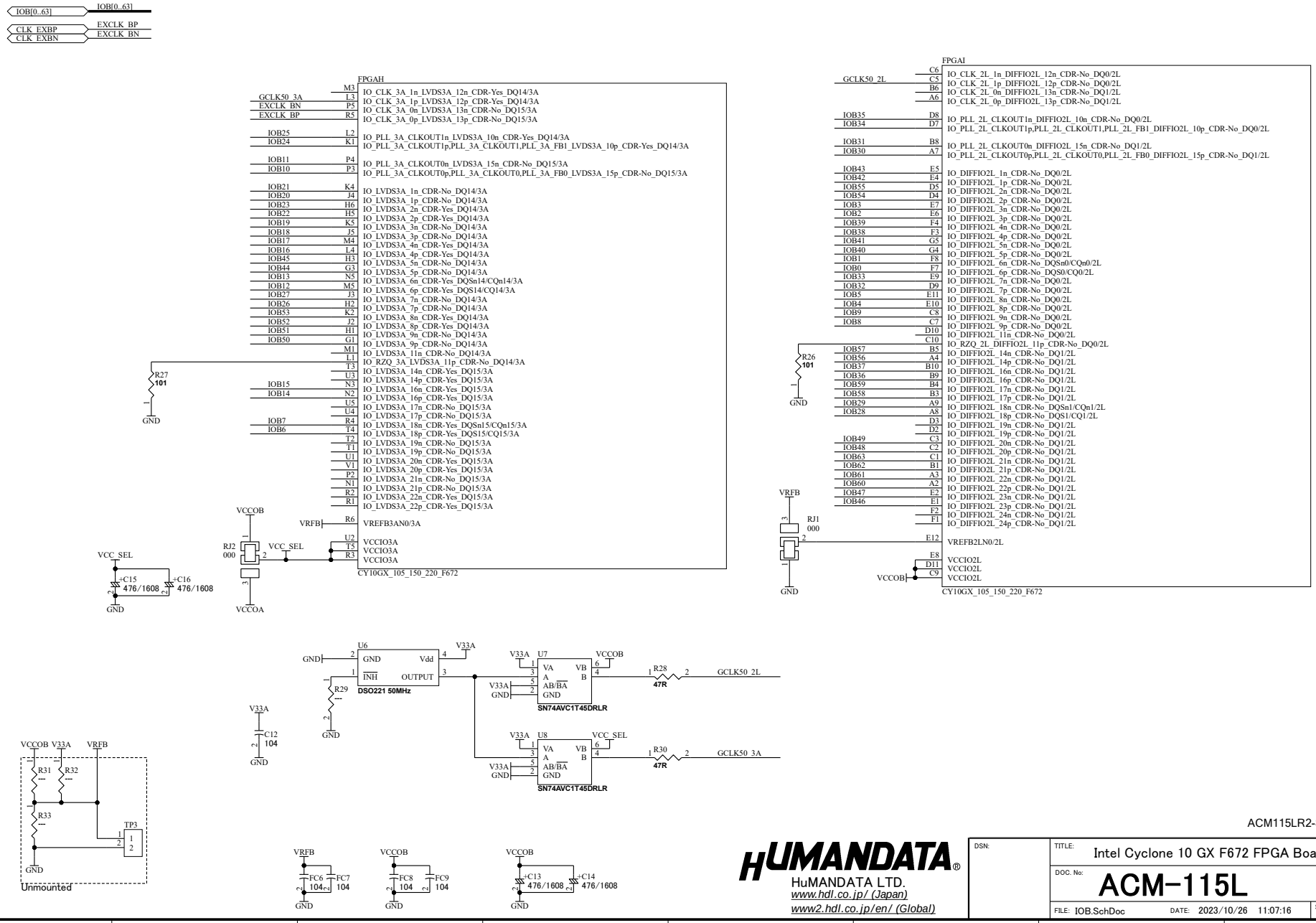
IOB[0..63]
IOB[0..63]
CLK_EXBP
CLK_EXBN
EXCLK_BP
EXCLK_BN
FPGAH
M3 IO_CLK_3A_1n_LVDS3A_12n_CDR-Yes_DQ14/3A
GCLK50_3A L3 IO_CLK_3A_1p_LVDS3A_12p_CDR-Yes_DQ14/3A
EXCLK_BN P5 IO_CLK_3A_0n_LVDS3A_13n_CDR-No_DQ15/3A
EXCLK_BP R5 IO_CLK_3A_0p_LVDS3A_13p_CDR-No_DQ15/3A
IOB25 L2 IO_PLL_3A_CLKOUT1n_LVDS3A_10n_CDR-Yes_DQ14/3A
IOB24 K1 IO_PLL_3A_CLKOUT1p,PLL_3A_CLKOUT1,PLL_3A_FB1_LVDS3A_10p_CDR-Yes_DQ14/3A
IOB11 P4 IO_PLL_3A_CLKOUT0n_LVDS3A_15n_CDR-No_DQ15/3A
IOB10 P3 IO_PLL_3A_CLKOUT0p,PLL_3A_CLKOUT0,PLL_3A_FB0_LVDS3A_15p_CDR-No_DQ15/3A
IOB21 K4 IO_LVDS3A_1n_CDR-No_DQ14/3A
IOB20 J4 IO_LVDS3A_1p_CDR-No_DQ14/3A
IOB23 H6 IO_LVDS3A_2n_CDR-Yes_DQ14/3A
IOB22 H5 IO_LVDS3A_2p_CDR-Yes_DQ14/3A
IOB19 K5 IO_LVDS3A_3n_CDR-No_DQ14/3A
IOB18 J5 IO_LVDS3A_3p_CDR-No_DQ14/3A
IOB17 M4 IO_LVDS3A_4n_CDR-Yes_DQ14/3A
IOB16 L4 IO_LVDS3A_4p_CDR-Yes_DQ14/3A
IOB45 H3 IO_LVDS3A_5n_CDR-No_DQ14/3A
IOB44 G3 IO_LVDS3A_5p_CDR-No_DQ14/3A
IOB13 N5 IO_LVDS3A_6n_CDR-Yes_DQSn14/CQn14/3A
IOB12 M5 IO_LVDS3A_6p_CDR-Yes_DQS14/CQ14/3A
IOB27 J3 IO_LVDS3A_7n_CDR-No_DQ14/3A
IOB26 H2 IO_LVDS3A_7p_CDR-No_DQ14/3A
IOB53 K2 IO_LVDS3A_8n_CDR-Yes_DQ14/3A
IOB52 J2 IO_LVDS3A_8p_CDR-Yes_DQ14/3A
IOB51 H1 IO_LVDS3A_9n_CDR-No_DQ14/3A
IOB50 G1 IO_LVDS3A_9p_CDR-No_DQ14/3A
M1 IO_LVDS3A_11n_CDR-No_DQ14/3A
L1 IO_RZQ_3A_LVDS3A_11p_CDR-No_DQ14/3A
T3 IO_LVDS3A_14n_CDR-Yes_DQ15/3A
U3 IO_LVDS3A_14p_CDR-Yes_DQ15/3A
IOB15 N3 IO_LVDS3A_16n_CDR-Yes_DQ15/3A
IOB14 N2 IO_LVDS3A_16p_CDR-Yes_DQ15/3A
U5 IO_LVDS3A_17n_CDR-No_DQ15/3A
U4 IO_LVDS3A_17p_CDR-No_DQ15/3A
IOB7 R4 IO_LVDS3A_18n_CDR-Yes_DQSn15/CQn15/3A
IOB6 T4 IO_LVDS3A_18p_CDR-Yes_DQS15/CQ15/3A
T2 IO_LVDS3A_19n_CDR-No_DQ15/3A
T1 IO_LVDS3A_19p_CDR-No_DQ15/3A
U1 IO_LVDS3A_20n_CDR-Yes_DQ15/3A
V1 IO_LVDS3A_20p_CDR-Yes_DQ15/3A
P2 IO_LVDS3A_21n_CDR-No_DQ15/3A
N1 IO_LVDS3A_21p_CDR-No_DQ15/3A
R2 IO_LVDS3A_22n_CDR-Yes_DQ15/3A
R1 IO_LVDS3A_22p_CDR-Yes_DQ15/3A
VRFB R6 VREFB3AN0/3A
U2 VCCIO3A
T5 VCCIO3A
R3 VCCIO3A
CY10GX_105_150_220_F672
R27 101
GND
VCCOB
RJ2 000
VCC_SEL
VCCOA
VCC_SEL
C15 476/1608
C16 476/1608
GND
FPGAI
C6 IO_CLK_2L_1n_DIFFIO2L_12n_CDR-No_DQ0/2L
GCLK50_2L C5 IO_CLK_2L_1p_DIFFIO2L_12p_CDR-No_DQ0/2L
B6 IO_CLK_2L_0n_DIFFIO2L_13n_CDR-No_DQ1/2L
A6 IO_CLK_2L_0p_DIFFIO2L_13p_CDR-No_DQ1/2L
IOB35 D8 IO_PLL_2L_CLKOUT1n_DIFFIO2L_10n_CDR-No_DQ0/2L
IOB34 D7 IO_PLL_2L_CLKOUT1p,PLL_2L_CLKOUT1,PLL_2L_FB1_DIFFIO2L_10p_CDR-No_DQ0/2L
IOB31 B8 IO_PLL_2L_CLKOUT0n_DIFFIO2L_15n_CDR-No_DQ1/2L
IOB30 A7 IO_PLL_2L_CLKOUT0p,PLL_2L_CLKOUT0,PLL_2L_FB0_DIFFIO2L_15p_CDR-No_DQ1/2L
IOB43 E5 IO_DIFFIO2L_1n_CDR-No_DQ0/2L
IOB42 E4 IO_DIFFIO2L_1p_CDR-No_DQ0/2L
IOB55 D5 IO_DIFFIO2L_2n_CDR-No_DQ0/2L
IOB54 D4 IO_DIFFIO2L_2p_CDR-No_DQ0/2L
IOB3 E7 IO_DIFFIO2L_3n_CDR-No_DQ0/2L
IOB2 E6 IO_DIFFIO2L_3p_CDR-No_DQ0/2L
IOB39 F4 IO_DIFFIO2L_4n_CDR-No_DQ0/2L
IOB38 F3 IO_DIFFIO2L_4p_CDR-No_DQ0/2L
IOB41 G5 IO_DIFFIO2L_5n_CDR-No_DQ0/2L
IOB40 G4 IO_DIFFIO2L_5p_CDR-No_DQ0/2L
IOB1 F8 IO_DIFFIO2L_6n_CDR-No_DQSn0/CQn0/2L
IOB0 F7 IO_DIFFIO2L_6p_CDR-No_DQS0/CQ0/2L
IOB33 E9 IO_DIFFIO2L_7n_CDR-No_DQ0/2L
IOB32 D9 IO_DIFFIO2L_7p_CDR-No_DQ0/2L
IOB5 E11 IO_DIFFIO2L_8n_CDR-No_DQ0/2L
IOB4 E10 IO_DIFFIO2L_8p_CDR-No_DQ0/2L
IOB9 C8 IO_DIFFIO2L_9n_CDR-No_DQ0/2L
IOB8 C7 IO_DIFFIO2L_9p_CDR-No_DQ0/2L
D10 IO_DIFFIO2L_11n_CDR-No_DQ0/2L
C10 IO_RZQ_2L_DIFFIO2L_11p_CDR-No_DQ0/2L
IOB57 B5 IO_DIFFIO2L_14n_CDR-No_DQ1/2L
IOB56 A4 IO_DIFFIO2L_14p_CDR-No_DQ1/2L
IOB37 B10 IO_DIFFIO2L_16n_CDR-No_DQ1/2L
IOB36 B9 IO_DIFFIO2L_16p_CDR-No_DQ1/2L
IOB59 B4 IO_DIFFIO2L_17n_CDR-No_DQ1/2L
IOB58 B3 IO_DIFFIO2L_17p_CDR-No_DQ1/2L
IOB29 A9 IO_DIFFIO2L_18n_CDR-No_DQSn1/CQn1/2L
IOB28 A8 IO_DIFFIO2L_18p_CDR-No_DQS1/CQ1/2L
D3 IO_DIFFIO2L_19n_CDR-No_DQ1/2L
D2 IO_DIFFIO2L_19p_CDR-No_DQ1/2L
IOB49 C3 IO_DIFFIO2L_20n_CDR-No_DQ1/2L
IOB48 C2 IO_DIFFIO2L_20p_CDR-No_DQ1/2L
IOB63 C1 IO_DIFFIO2L_21n_CDR-No_DQ1/2L
IOB62 B1 IO_DIFFIO2L_21p_CDR-No_DQ1/2L
IOB61 A3 IO_DIFFIO2L_22n_CDR-No_DQ1/2L
IOB60 A2 IO_DIFFIO2L_22p_CDR-No_DQ1/2L
IOB47 E2 IO_DIFFIO2L_23n_CDR-No_DQ1/2L
IOB46 E1 IO_DIFFIO2L_23p_CDR-No_DQ1/2L
F2 IO_DIFFIO2L_24n_CDR-No_DQ1/2L
F1 IO_DIFFIO2L_24p_CDR-No_DQ1/2L
E12 VREFB2LN0/2L
E8 VCCIO2L
D11 VCCIO2L
C9 VCCIO2L
CY10GX_105_150_220_F672
R26 101
GND
VRFB
RJ1 000
VCCOB
U6
GND
Vdd
INH
OUTPUT
DSO221 50MHz
V33A
R29
C12 104
U7
VA
VB
A
AB/BA
GND
SN74AVC1T45DRLR
R28 47R
GCLK50_2L
U8
VCC_SEL
R30 47R
GCLK50_3A
R31
R32
R33
TP3
Unmounted
FC6 104
FC7 104
FC8 104
FC9 104
C13 476/1608
C14 476/1608
HUMANDATA
HuMANDATA LTD.
www.hdl.co.jp/ (Japan)
www2.hdl.co.jp/en/ (Global)
ACM115LR2-SCH-E.pdf
DSN:
TITLE: Intel Cyclone 10 GX F672 FPGA Board
DOC. No: ACM-115L
E
FILE: IOB.SchDoc
DATE: 2023/10/26 11:07:16
Sheet: 3 / 6
V6_20191224

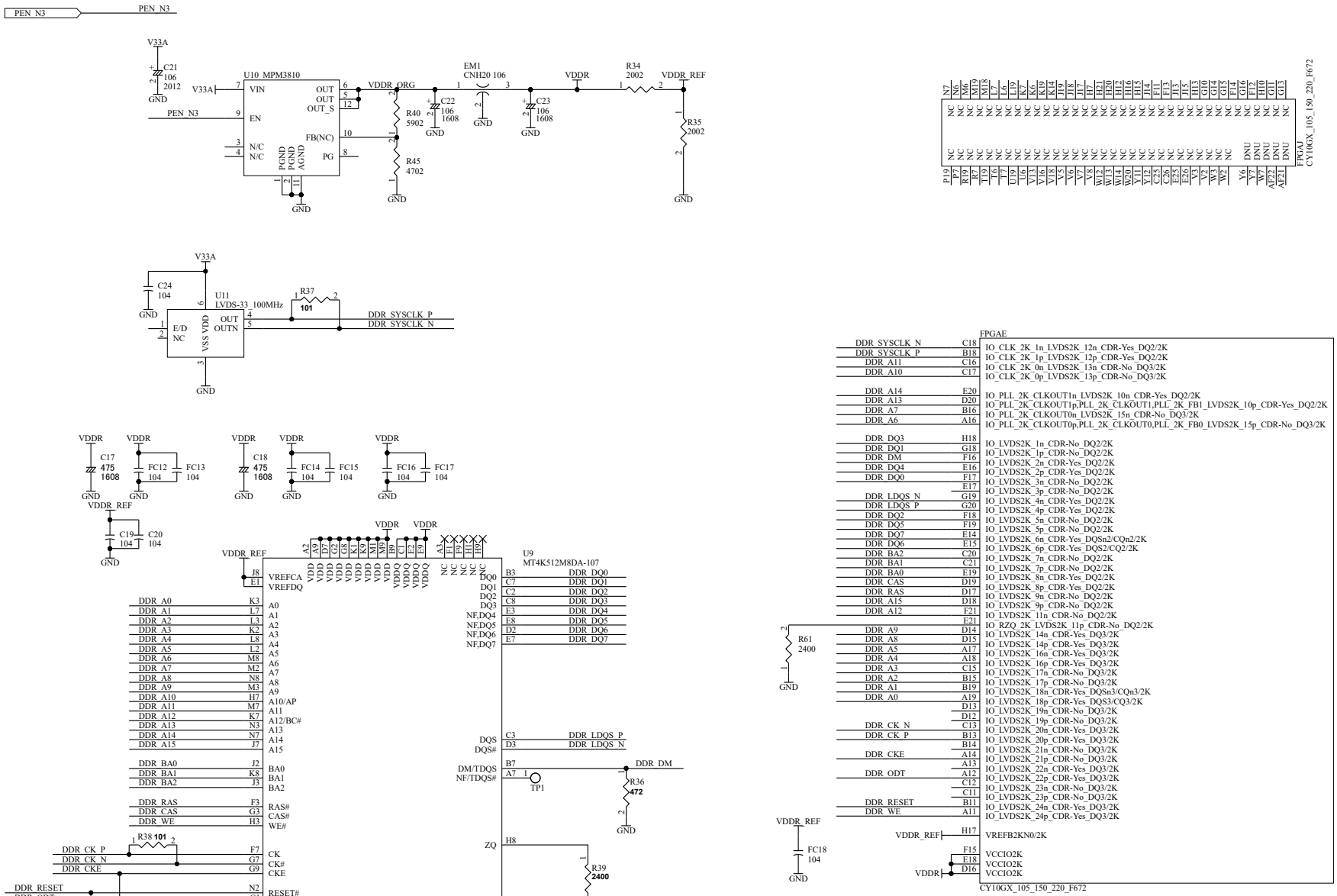

ACM115LR2-SCH-E.pdf

HUMANDATA®
HuMANDATA LTD.
www.hdl.co.jp/ (Japan)
www2.hdl.co.jp/en/ (Global)

DSN:	TITLE: Intel Cyclone 10 GX F672 FPGA Board	
	DOC. No: ACM-115L	E
	FILE: Memory.sch DATE: 2023/10/26 11:07:16	Sheet: 4 / 6

V6_20191224

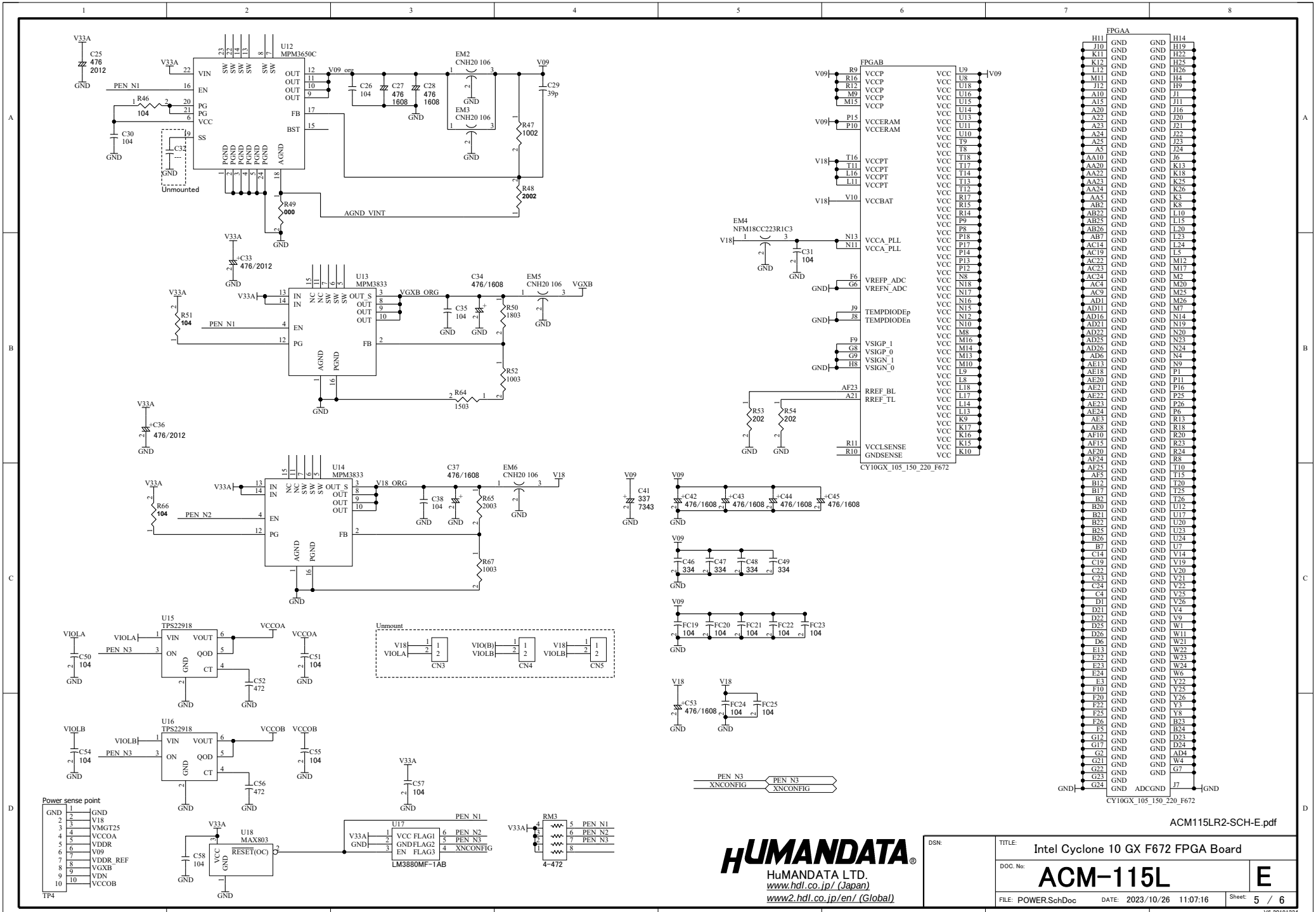
U12 MPM3650C
U13 MPM3833
U14 MPM3833
U15 TPS22918
U16 TPS22918
U17 LM3880MF-1AB
U18 MAX803
FPGAB
CY10GX_105_150_220_F672
FPGAA
CY10GX_105_150_220_F672
Unmounted
Unmount
Power sense point
TP4
HUMANDATA
HuMANDATA LTD.
www.hdl.co.jp/ (Japan)
www2.hdl.co.jp/en/ (Global)
DSN:
TITLE: Intel Cyclone 10 GX F672 FPGA Board
DOC. No: ACM-115L
E
FILE: POWER.SchDoc
DATE: 2023/10/26 11:07:16
Sheet: 5 / 6
ACM115LR2-SCH-E.pdf
V6_20191224

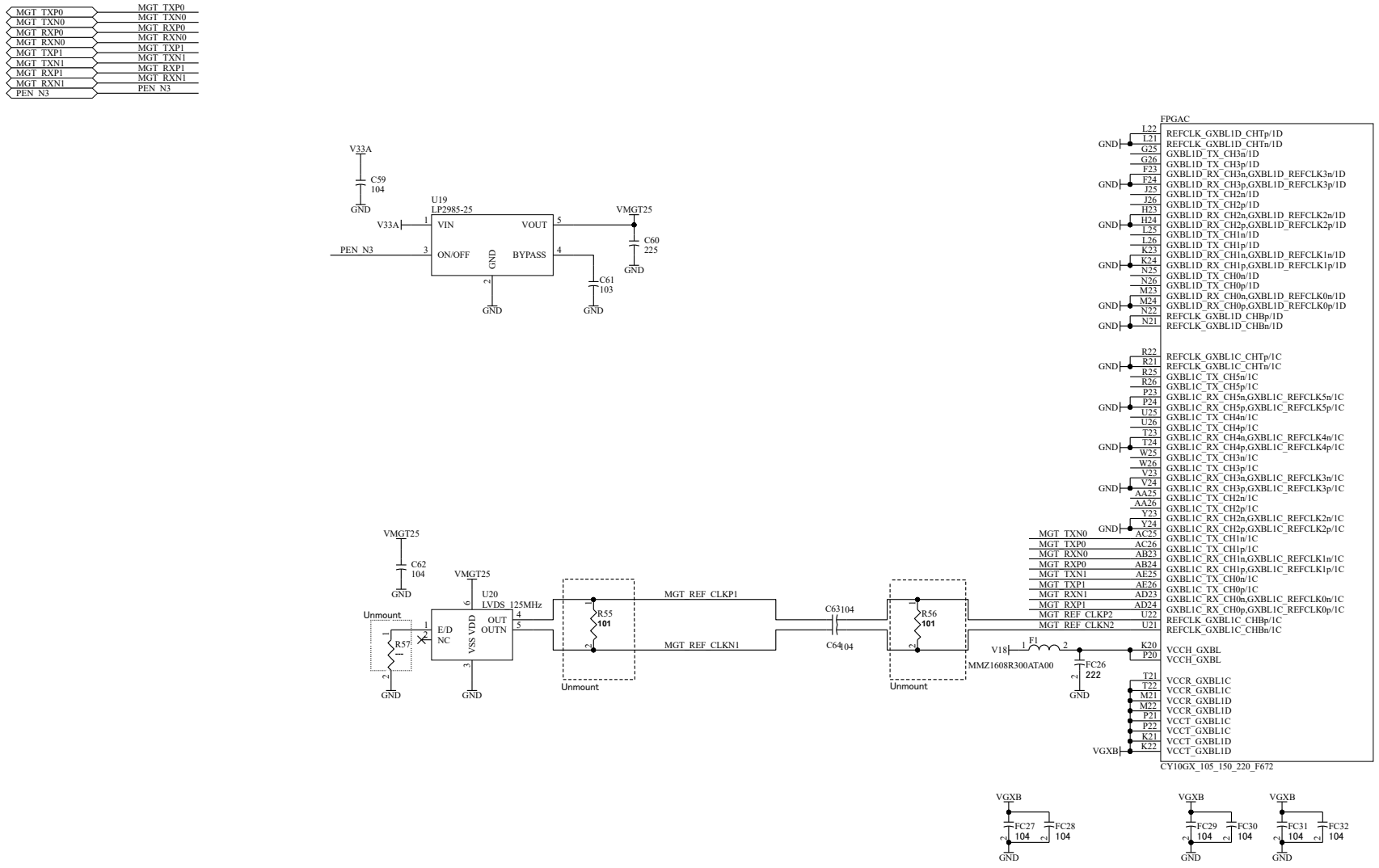

ACM115LR2-SCH-E.pdf

HuMANDATA LTD.
www.hdl.co.jp/ (Japan)
www2.hdl.co.jp/en/ (Global)

DSN:	
TITLE:	Intel Cyclone 10 GX F672 FPGA Board
DOC. No:	ACM-115L E
FILE: XCVR.SchDoc	DATE: 2023/10/26 11:07:16
Sheet:	6 / 6

V6_20191224