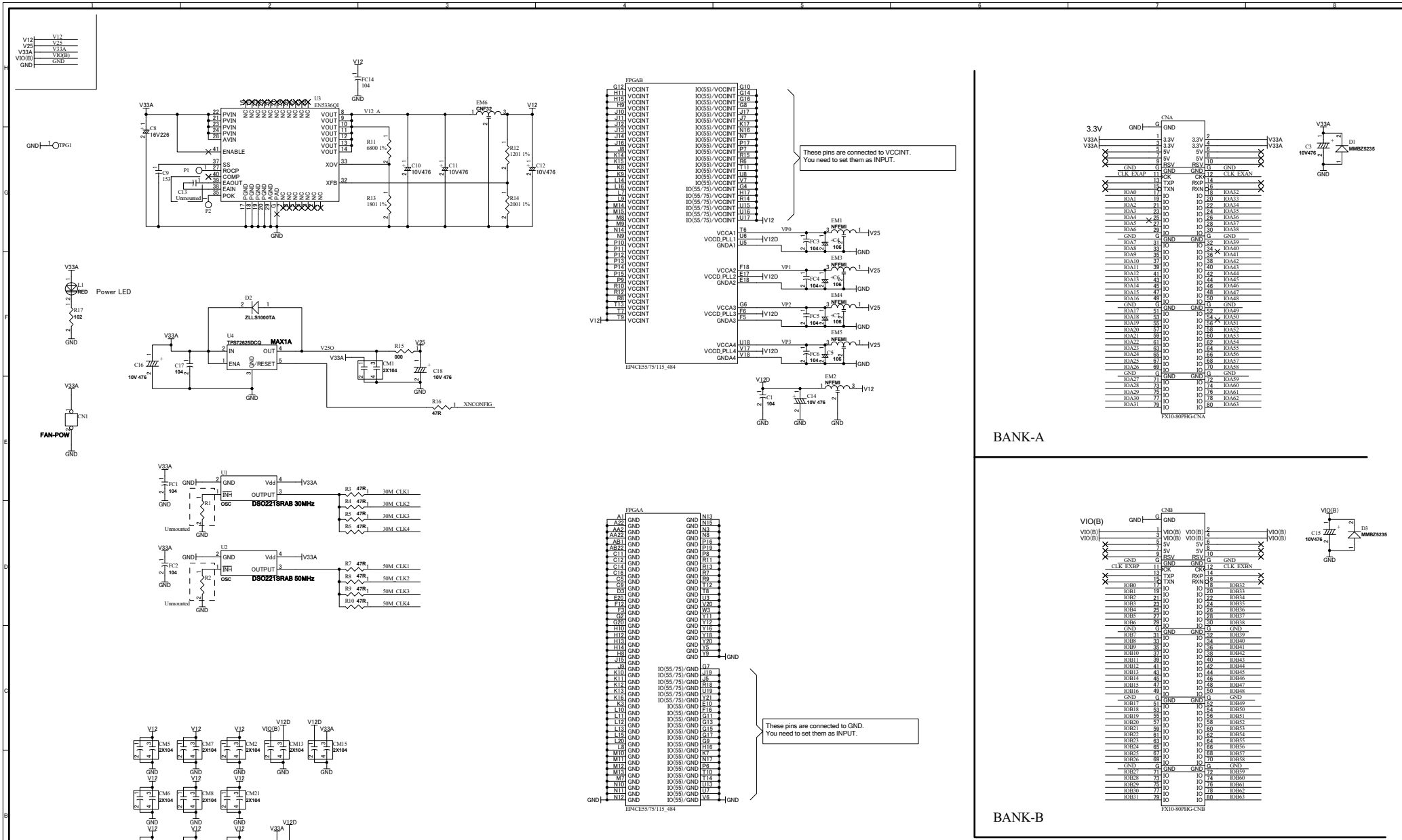

ACM107R2-SCH-A4.pdf

HUMANDATA®
HuMANDATA LTD.
www.hdl.co.jp

DSN:	
TITLE:	Altera Cyclone IV E F484 FPGA board
DOC. No:	ACM-107
	A4
FILE: ACM107A.sch	DATE: 5-Jan-2022 17:41:53
Sheet:	1 / 2

V5 20150107

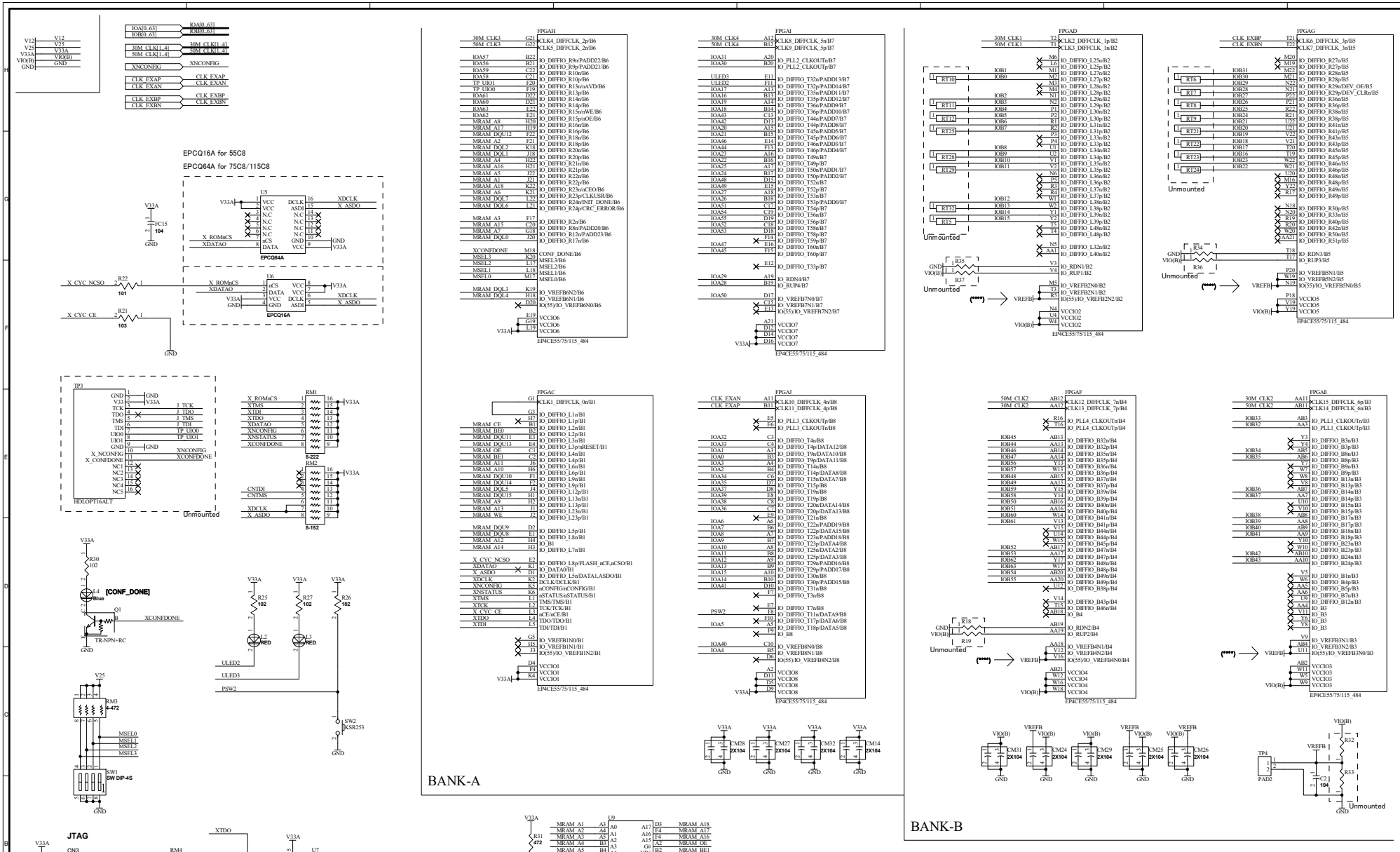
EPCQ16A for 55C8
EPCQ64A for 75C8/115C8
EPCQ64A
EPCQ16A
FPGAH
FPGAI
FPGAD
FPGAG
FPGAC
FPGAJ
FPGAF
FPGAE
EP4CE55/75/115_484
BANK-A
BANK-B
JTAG
HDLOPT16ALT
[CONF_DONE]
Unmounted
These pins are connected to VREFB.
You need to set them as INPUT.
ACM107R2-SCH-A4.pdf
HUMANDATA
HuMANDATA LTD.
www.hdl.co.jp
DSN:
TITLE:
Altera Cyclone IV E F484 FPGA board
DOC. No:
ACM-107
A4
FILE: FPGA1.sch
DATE: 5-Jan-2022 17:41:53
Sheet: 2 / 2
V5 20150107