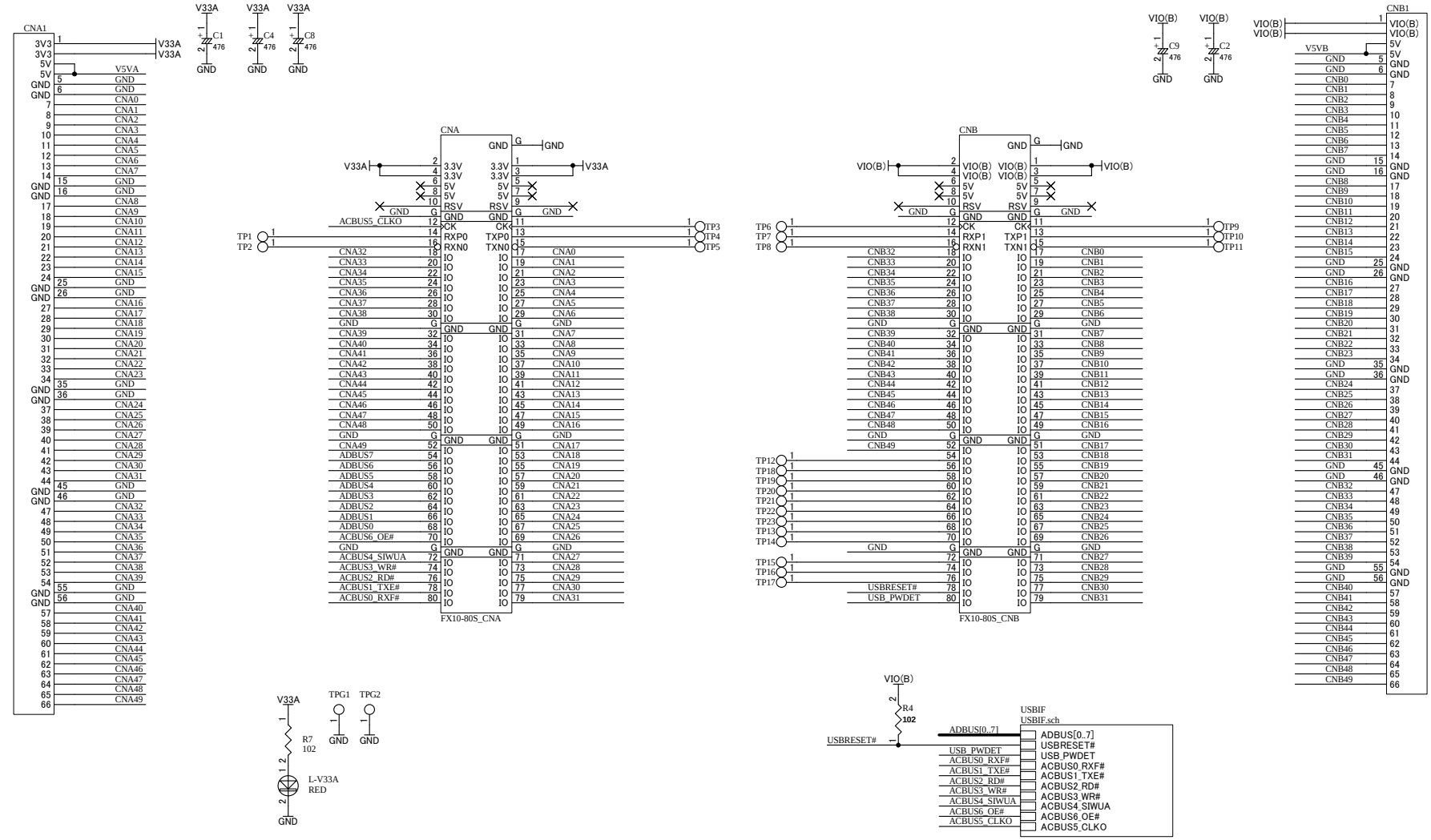

ACC034R1-SCH-A1.pdf

HuMANDATA LTD.
www.hdl.co.jp

DSN:	
TITLE:	USB2.0 I/F board for ACM/XCM-1 series
DOC. No:	ACC-034 A1
FILE: ACC034A.sch	DATE: 1-Aug-2016 17:11:49 Sheet: 1 / 2

V5.20150107

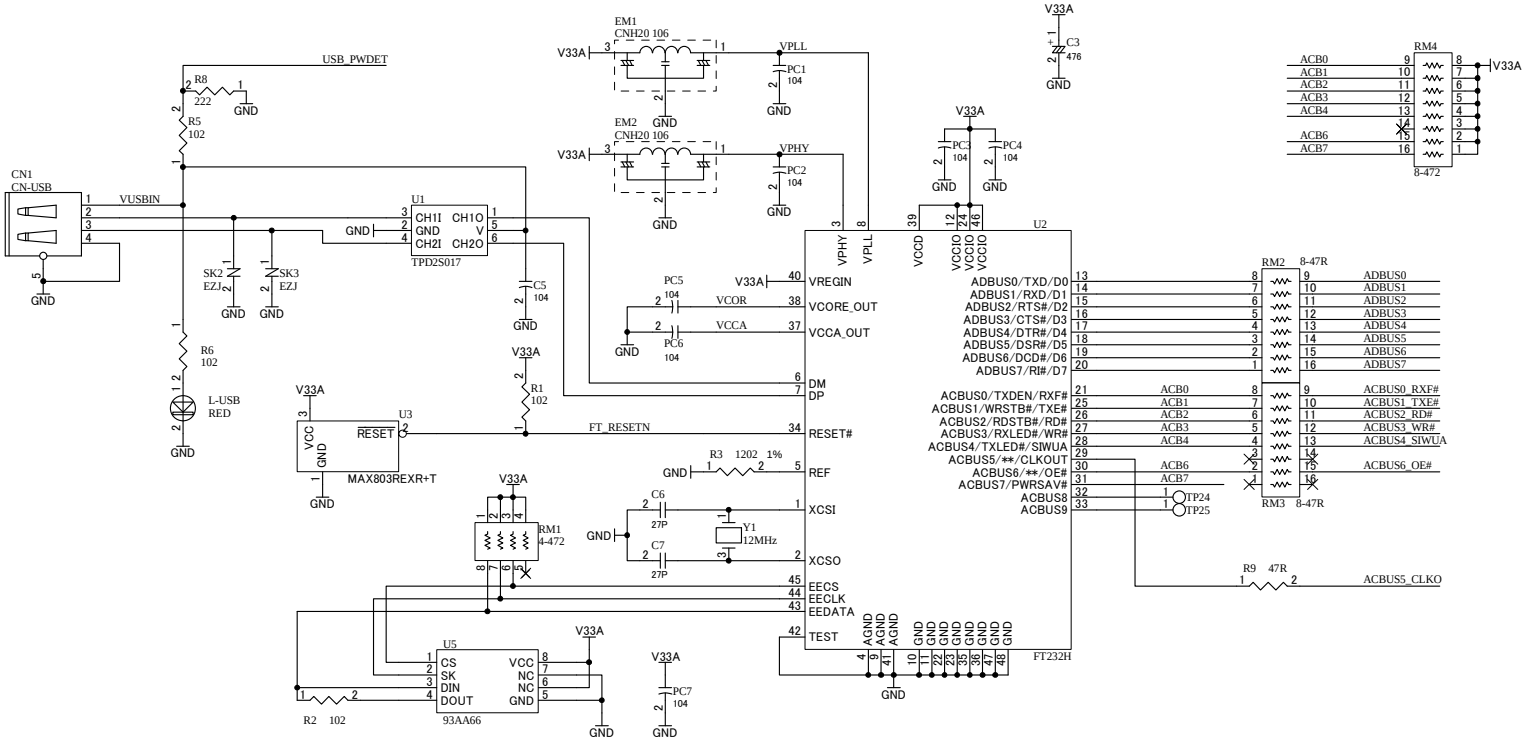

ACC034R1-SCH-A1.pdf

HuMANDATA LTD.
www.hdl.co.jp

DSN:	
TITLE:	USB2.0 I/F board for ACM/XCM-1 series
DOC. No:	ACC-034 A1
FILE: USBIF.sch	DATE: 1-Aug-2016 17:11:50 Sheet: 2 / 2

V5.20150107