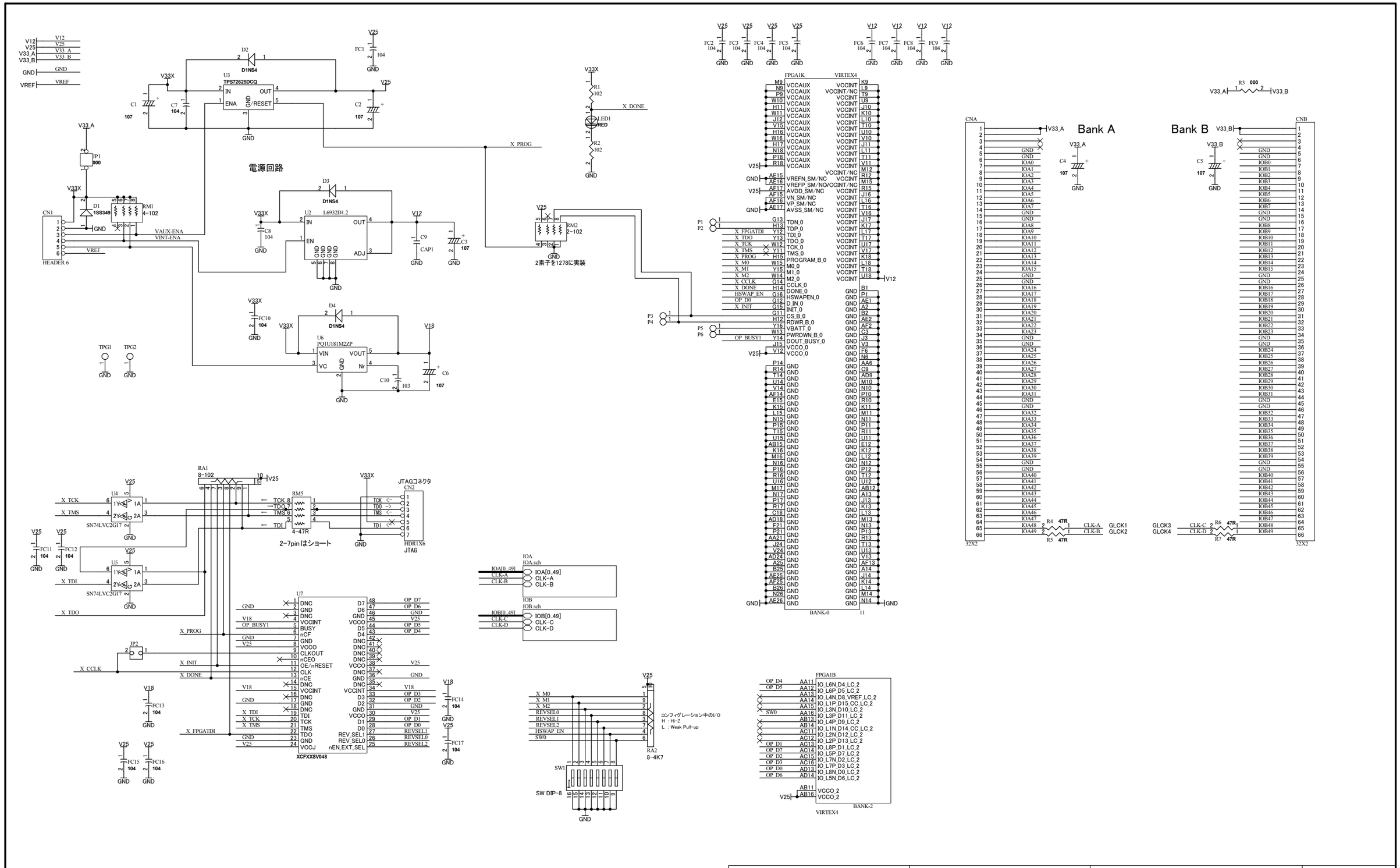

HUMANDATA

2007/10/12

HuMANDATA LTD.
OSAKA JAPAN
www.hdl.co.jp

Virtex4FF668EVABOARD

DOC. No. XCM-009 B1

Date: 26-Oct-2007 16:04:21 File: XCM009B.sch Sheet 1 of 3

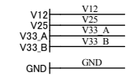

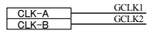

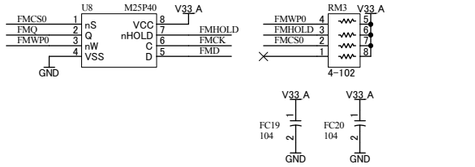

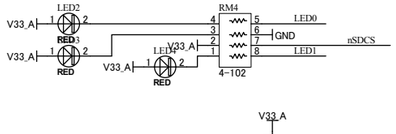

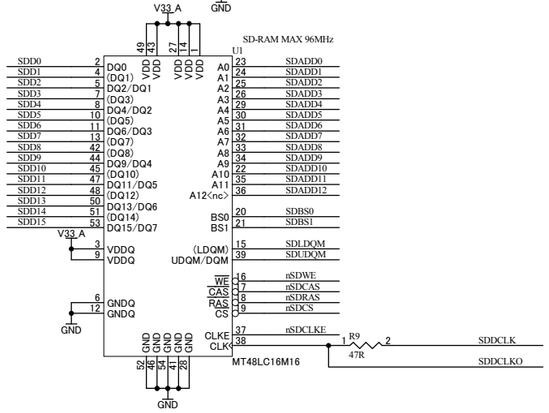

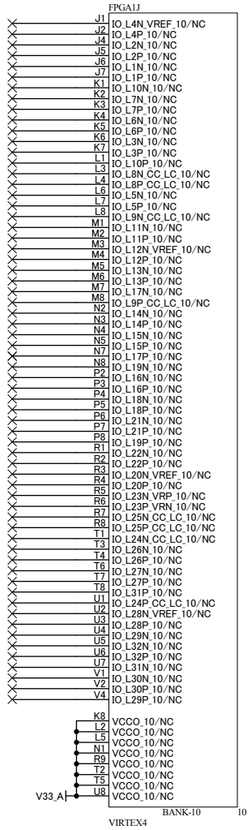

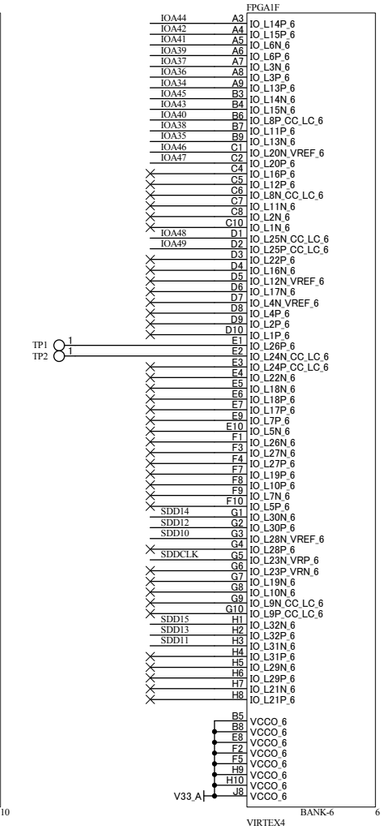

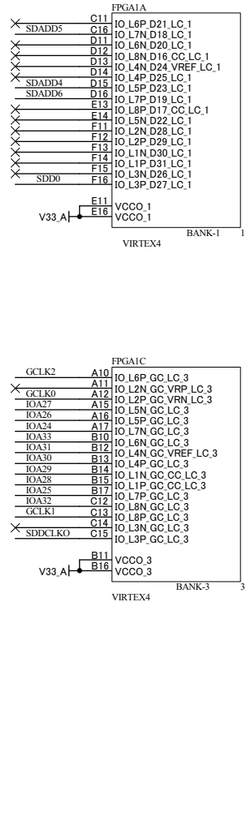

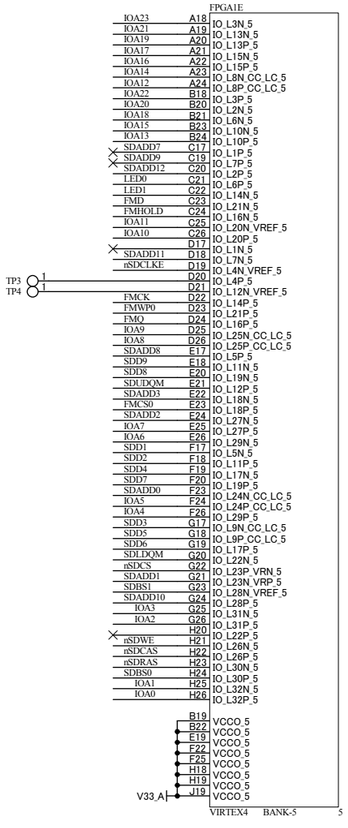

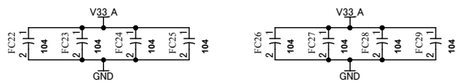

BANK-A

HuMANDATA		Virtex4FF668EVABORD	
HuMANDATA LTD. OSAKA JAPAN www.hdl.co.jp		DOC. No. XCM-009	B1
Date: 26-Oct-2007 16:04:22	File: IOA.sch	Sheet 2 of 3	

V12
V25
V33_A
V33_B
GND
VREF

IOB[0_49]

CLK-C
CLK-D
GCLK3
GCLK4

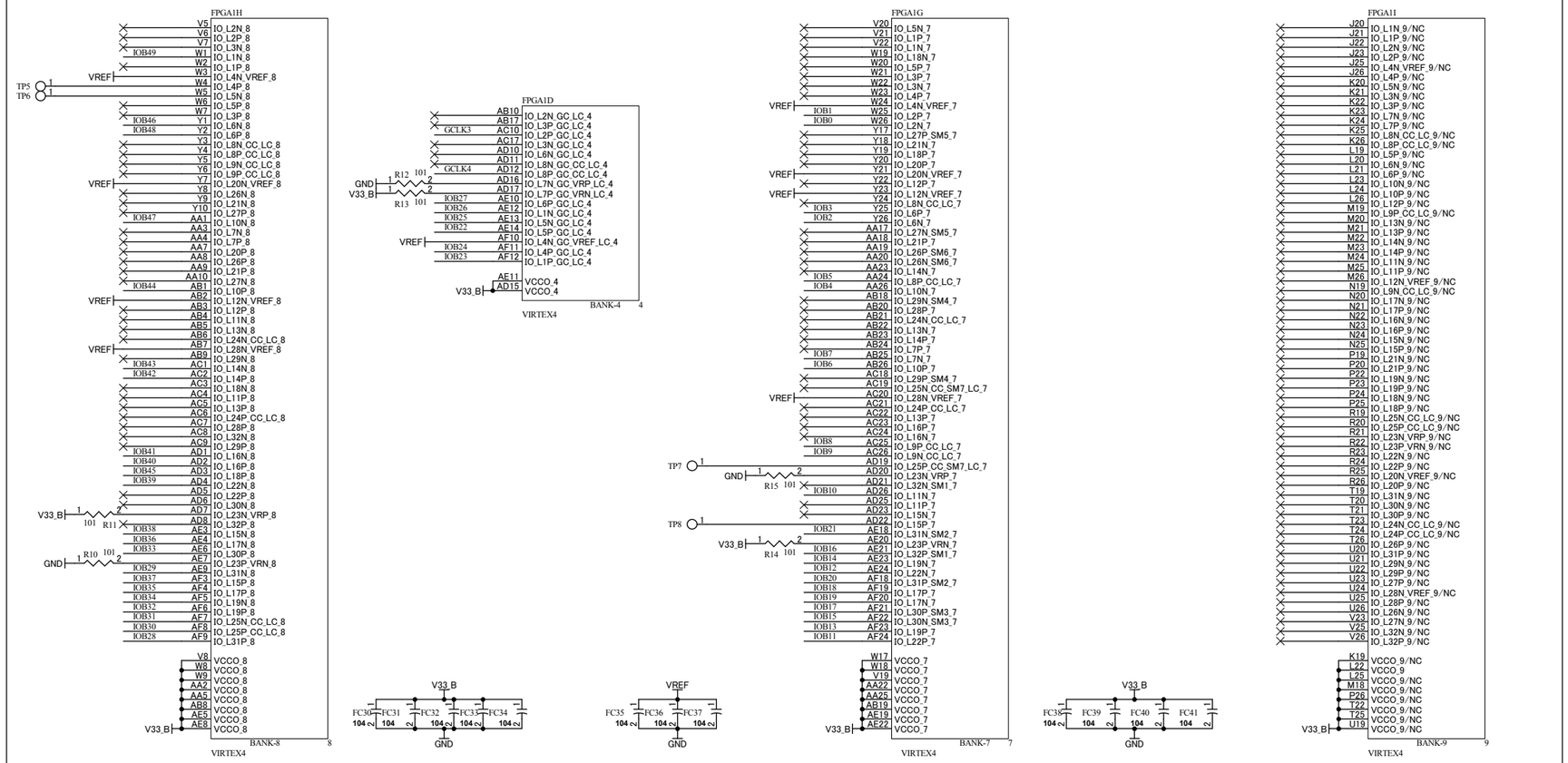

BANK-B

HuMANDATA LTD. OSAKA JAPAN www.hdl.co.jp		Virtex4FF668EVABOARD	
		DOC. No. XCM-009	B1
Date: 26-Oct-2007 16:04:23	File: IOB.sch	Sheet 3 of 3	