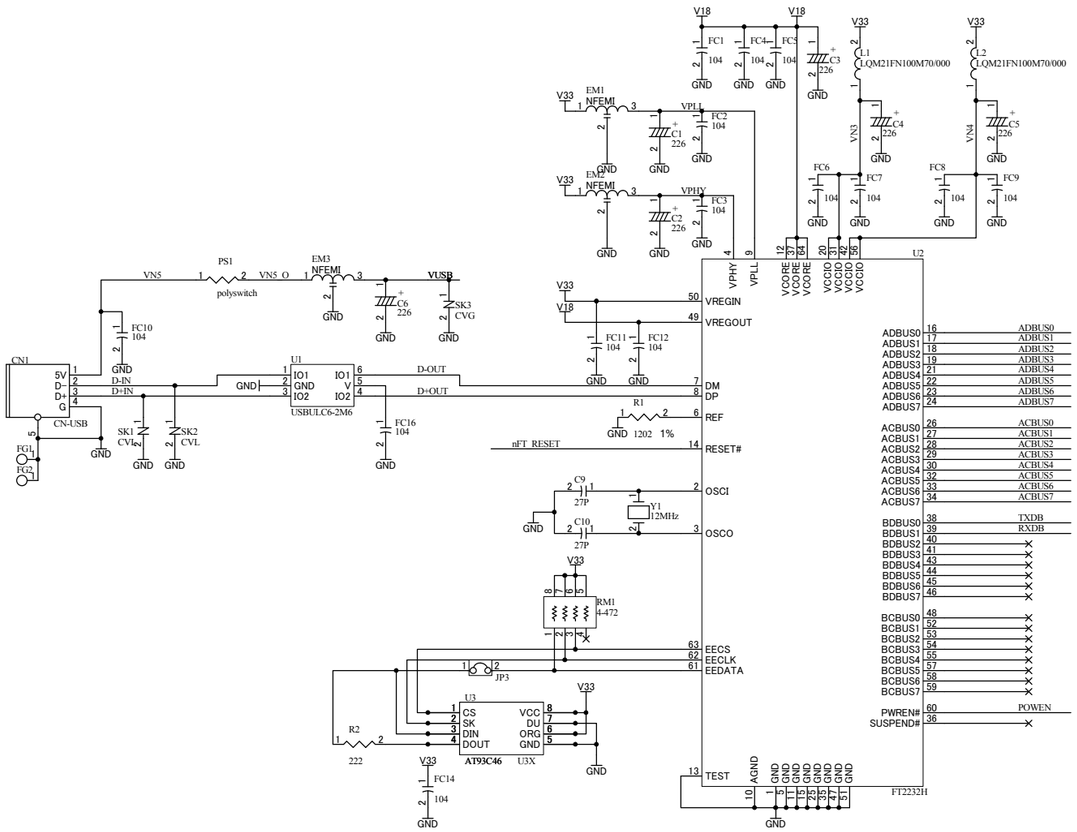

NET LABEL	Operation Mode								
	RS232	245 FIFO Sync	245 FIFO	ASYNC Bit-bang	SYNC Bit-bang	MPSSE	Fast Serial	CPU Style FIFO	Host Bus Emulation
ADBUS0	TXD	D0	D0	D0	D0	TCK/SK	-	D0	AD0
ADBUS1	RXD	D1	D1	D1	D1	TDI/DO	-	D1	AD1
ADBUS2	RTS#	D2	D2	D2	D2	TDO/DI	-	D2	AD2
ADBUS3	CTS#	D3	D3	D3	D3	TMS/CS	-	D3	AD3
ADBUS4	DTR#	D4	D4	D4	D4	GPIOL0	-	D4	AD4
ADBUS5	DSR#	D5	D5	D5	D5	GPIOL1	-	D5	AD5
ADBUS6	DCD#	D6	D6	D6	D6	GPIOL2	-	D6	AD6
ADBUS7	RI#	D7	D7	D7	D7	GPIOL3	-	D7	AD7
ACBUS0	TXDEN	RXF#	RXF#	-	-	GPIOH0	-	CS#	A8
ACBUS1	-	TXE#	TXE#	WRSTB#	WRSTB#	GPIOH1	-	A0	A9
ACBUS2	-	RD#	RD#	RDSTB#	RDSTB#	GPIOH2	-	RD#	A10
ACBUS3	RXLED#	WR#	WR#	-	-	GPIOH3	-	WR#	A11
ACBUS4	TXLED#	SIWUA	SIWUA	SIWUA	SIWUA	GPIOH4	-	SIWUA	A12
ACBUS5	-	CLKOUT	-	-	-	GPIOH5	-	-	A13
ACBUS6	-	OE#	-	-	-	GPIOH6	-	-	A14
ACBUS7	-	-	-	-	-	GPIOH7	-	-	A15
BDBUS0	TXD	-	D0	D0	D0	TCK/SK	FSDI	D0	CS#
BDBUS1	RXD	-	D1	D1	D1	TDI/DO	FSCLK	D1	ALE
BDBUS2	RTS#	-	D2	D2	D2	TDO/DI	FSDO	D2	RD#
BDBUS3	CTS#	-	D3	D3	D3	TMS/CS	FSCTS	D3	WR#
BDBUS4	DTR#	-	D4	D4	D4	GPIOL0	-	D4	IORDY
BDBUS5	DSR#	-	D5	D5	D5	GPIOL1	-	D5	CLKOUT
BDBUS6	DCD#	-	D6	D6	D6	GPIOL2	-	D6	I/O0
BDBUS7	RI#	-	D7	D7	D7	GPIOL3	-	D7	I/O1
BCBUS0	TXDEN	-	RXF#	-	-	GPIOH0	-	CS#	-
BCBUS1	-	-	TXE#	WRSTB#	WRSTB#	GPIOH1	-	A0	-
BCBUS2	-	-	RD#	RDSTB#	RDSTB#	GPIOH2	-	RD#	-
BCBUS3	RXLED#	-	WR#	-	-	GPIOH3	-	WR#	-
BCBUS4	TXLED#	-	SIWUB	SIWUB	SIWUB	GPIOH4	SIWUB	SIWUB	-
BCBUS5	-	-	-	-	-	GPIOH5	-	-	-
BCBUS6	-	-	-	-	-	GPIOH6	-	-	-
BCBUS7	PWRSAV#	PWRSAV#	PWRSAV#	PWRSAV#	PWRSAV#	GPIOH7	PWRSAV#	PWRSAV#	PWRSAV#

HuMANDATA are not responsible for the pin function table above.
For accurate information, please refer to FTDI's official document.

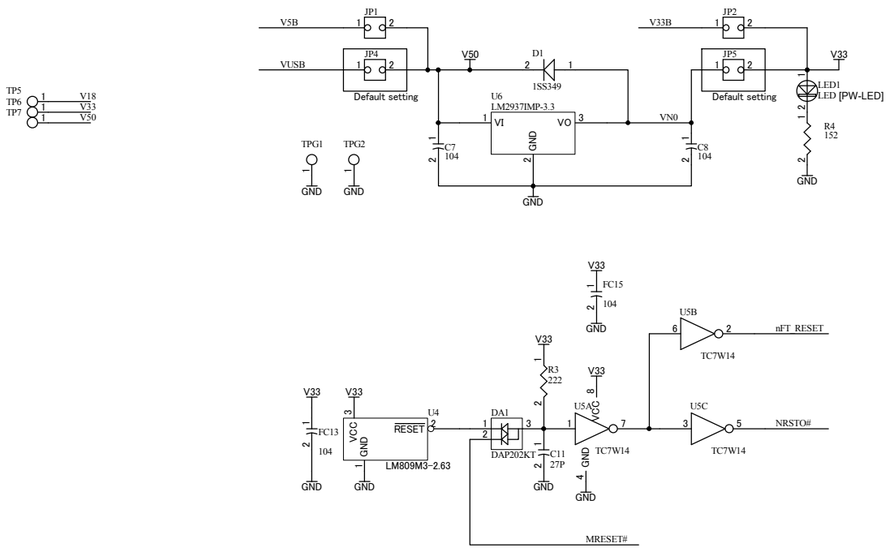

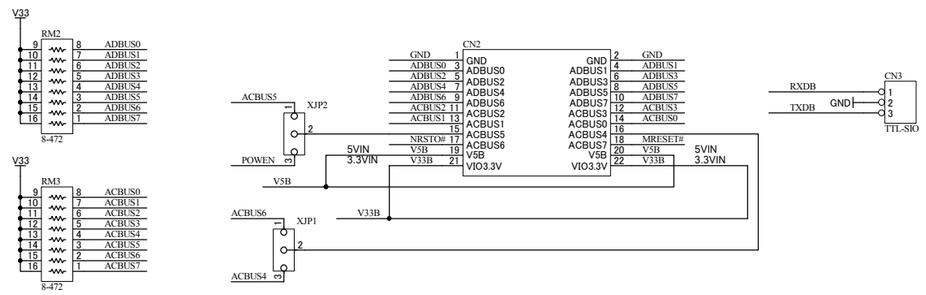

USB103R1-SCH-B1.pdf

HUMANDATA

HuMANDATA LTD.
OSAKA JAPAN
www.hdl.co.jp/en/(Global)
www.hdl.co.jp/(Japan)

FTDI FT2232H Evaluation Board

DOC. No. USB-103 B1

Date: 22-Nov-2010 15:49:35 File: USB103B.sch Sheet 1 of 1