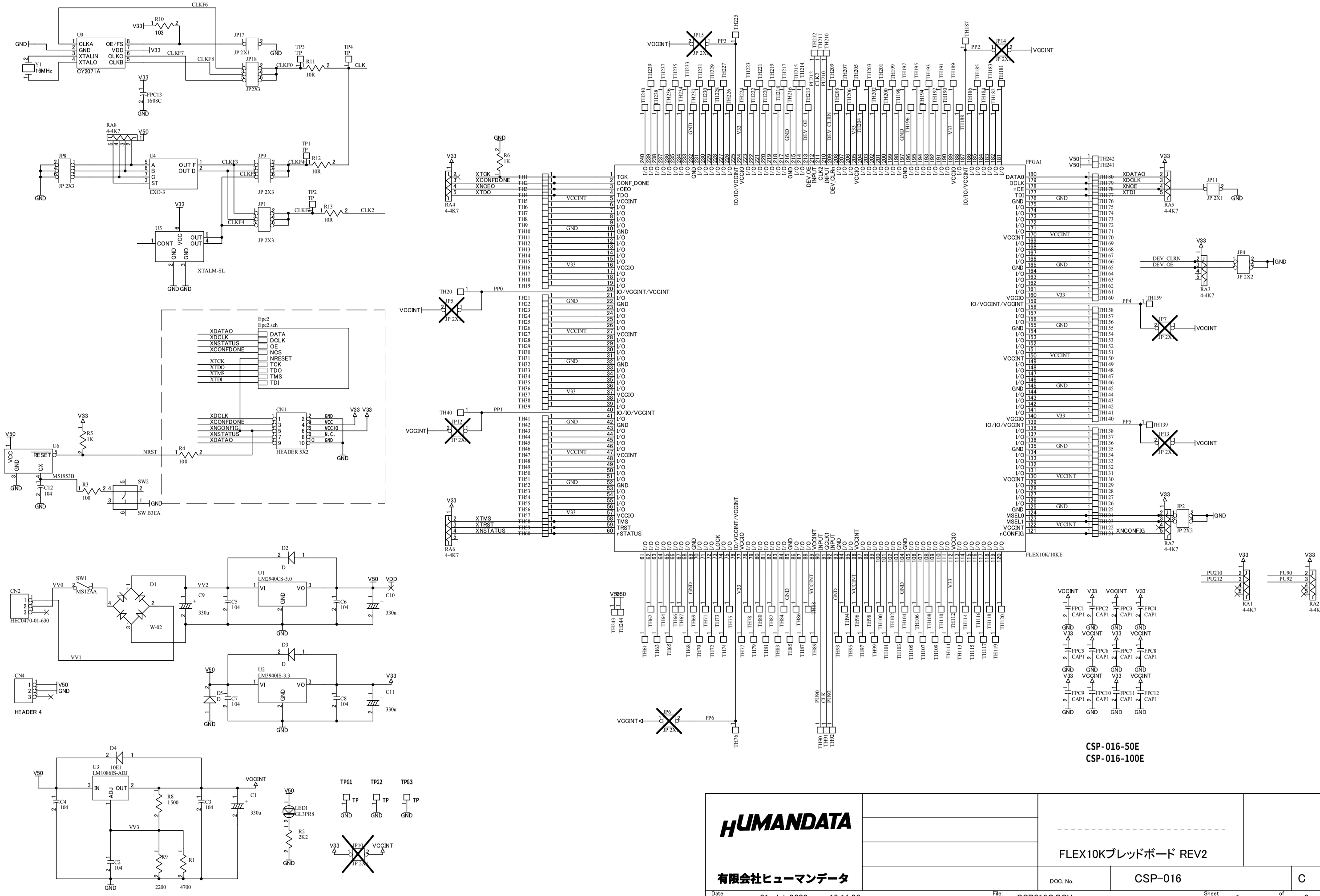
U9
CY2071A
CLKA
GND
XTALIN
XTALO
OE/FS
VDD
CLKG
CLKB
Y1
16MHz
CLKF6
CLKF7
CLKF8
CLKF0
CLKF3
CLKF1
CLKF2
CLKF4
CLK
CLK2
JP17
JP18
JP9
JP1
JP 2X1
JP2X3
JP 2X3
TP3
TP4
TP1
TP2
R10
103
R11
10R
R12
10R
R13
10R
FPC13
1608C
RA8
4-4K7
V50
JP8
U4
EXO-3
OUT F
OUT D
U5
XTALM-SL
CONT
VCC
OUT
GND
Epc2
Epc2.sch
XDATAO
XDCLK
XNSTATUS
XCONFDONE
XTCK
XTDO
XTMS
XTDI
DATA
DCLK
OE
NCS
NRESET
TCK
TDO
TMS
TDI
CN1
HEADER 5X2
XCONFIG
N.C.
U6
M51953B
RESET
NRST
R4
100
R5
1K
R3
100
C12
104
SW2
SW B3EA
CN2
HEC0470-01-630
SW1
MS12AA
VV0
VV1
VV2
VV3
D1
W-02
C9
330u
C5
104
C6
104
C10
330u
U1
LM2940CS-5.0
VI
VO
D2
D
VDD
D3
U2
LM3940IS-3.3
D5
C7
104
C8
104
C11
330u
CN4
HEADER 4
D4
U3
LM1086IS-ADJ
IN
OUT
ADJ
C4
104
R8
1500
C3
104
C1
330u
C2
104
R9
2200
R1
4700
VCCINT
LED1
GL3PR8
R2
2K2
TPG1
TPG2
TPG3
TP
JP10
JP 2X
RA4
4-4K7
XTCK
XCONFDONE
XNCEO
XTDO
RA6
4-4K7
XTMS
XTRST
XNSTATUS
R6
1K
JP5
JP12
JP6
PP0
PP1
PP3
PP6
TH20
TH40
TH76
TCK
CONF_DONE
nCEO
TDO
VCCINT
VCCIO
IO/VCCINT/VCCINT
IO/IO/VCCINT
TMS
TRST
nSTATUS
JP15
JP14
JP 2X
FPGA1
FLEX10K/10KE
DATA0
DCLK
nCE
TDI
MSEL0
MSEL1
nCONFIG
RA5
4-4K7
JP11
JP 2X1
JP4
JP 2X2
RA3
4-4K7
DEV_CLRN
DEV_OE
JP7
PP4
TH159
JP13
PP5
TH139
JP2
RA7
4-4K7
RA1
4-4K7
RA2
4-4K7
PU210
PU212
PU90
PU92
FPC1
FPC2
FPC3
FPC4
FPC5
FPC6
FPC7
FPC8
FPC9
FPC10
FPC11
FPC12
CAP1
CSP-016-50E
CSP-016-100E
HUMANDATA
有限会社ヒューマンデータ
FLEX10Kブレッドボード REV2
DOC. No.
CSP-016
C
Date:
31-Jul-2003
19:11:23
File:
CSP016C.SCH
Sheet
1
of
2

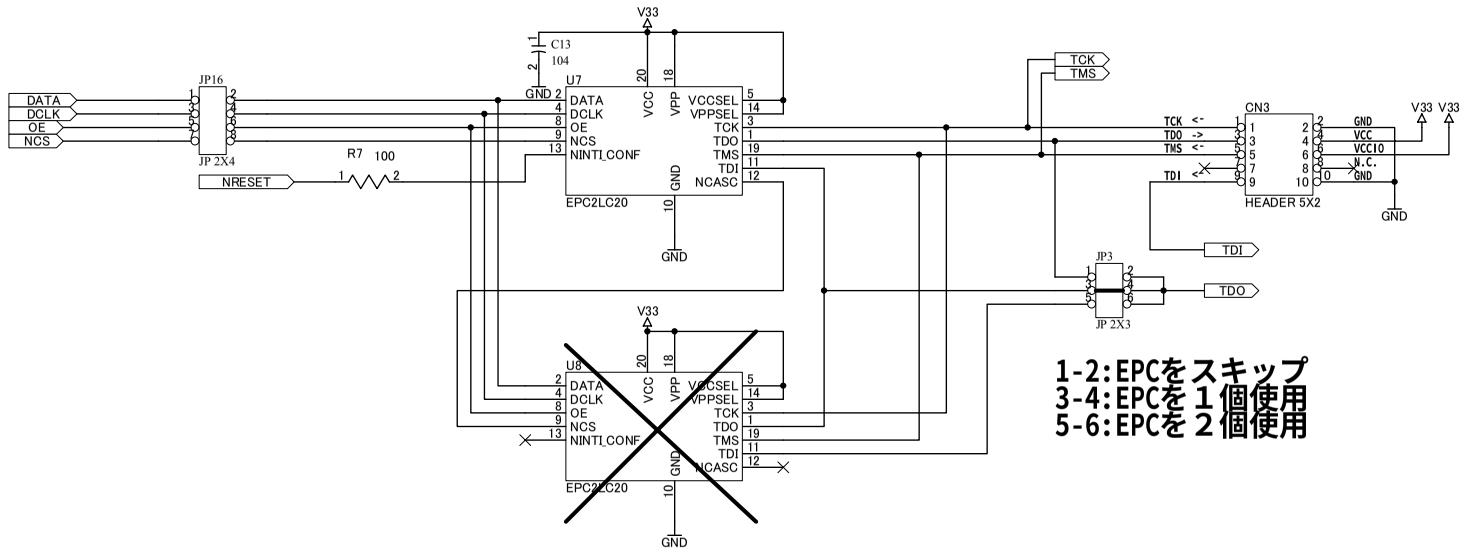

HUMANDATA

有限会社ヒューマンデータ

FLEX10Kブレッドボード REV2

DOC. No. CSP-016 C

Date: 31-Jul-2003 19:11:25 File: Epc2.sch Sheet 2 of 2