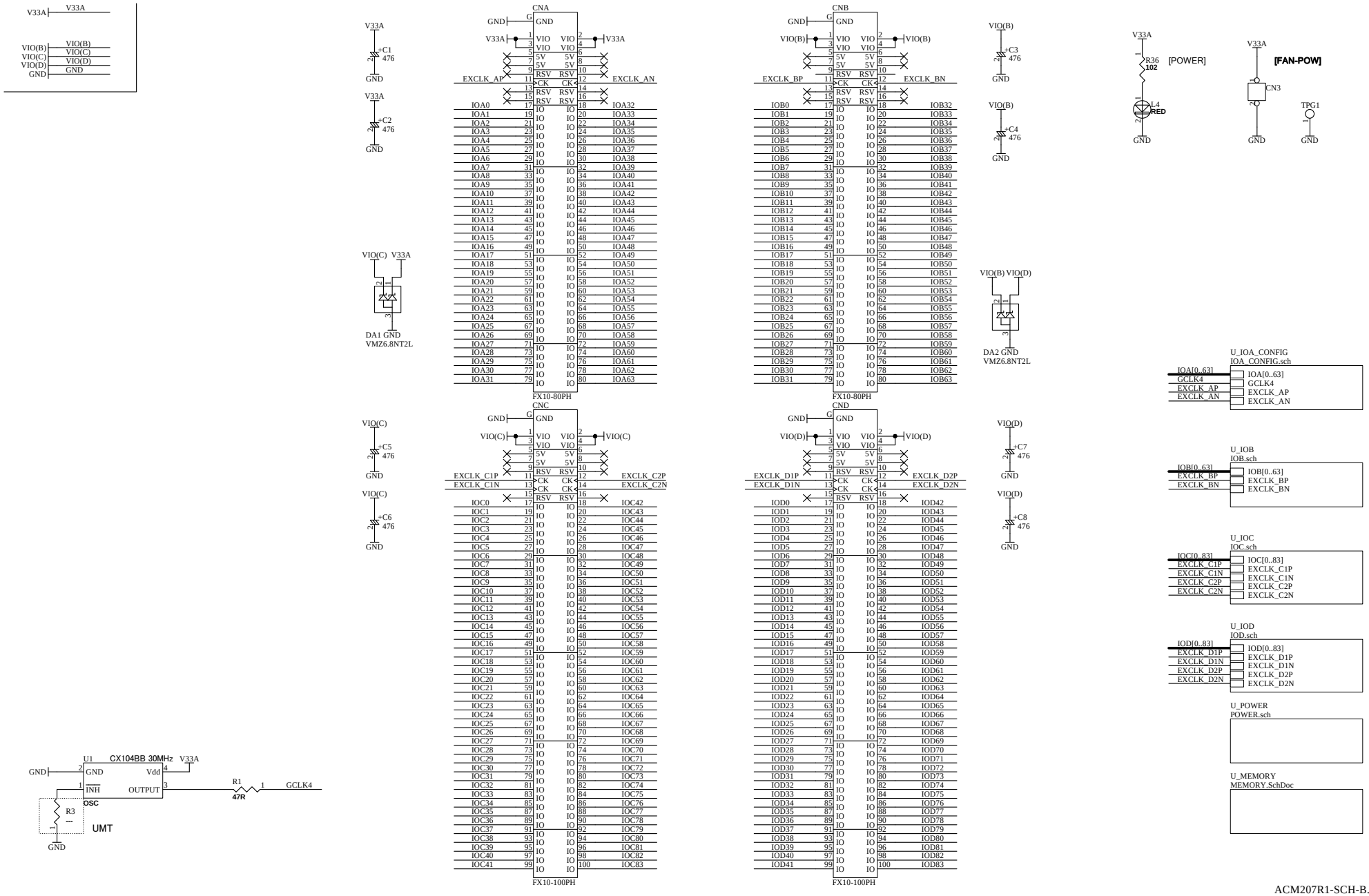

ACM207R1-SCH-B.pdf

HuMANDATA LTD.
www.hdl.co.jp

DSN:	
TITLE:	ALTERA MAX10 F672 FPGA board
DOC. No:	ACM-207
	B
FILE: ACM207A.sch	DATE: 2016/11/07 13:37:16
Sheet:	1 / 7

V5_20150107

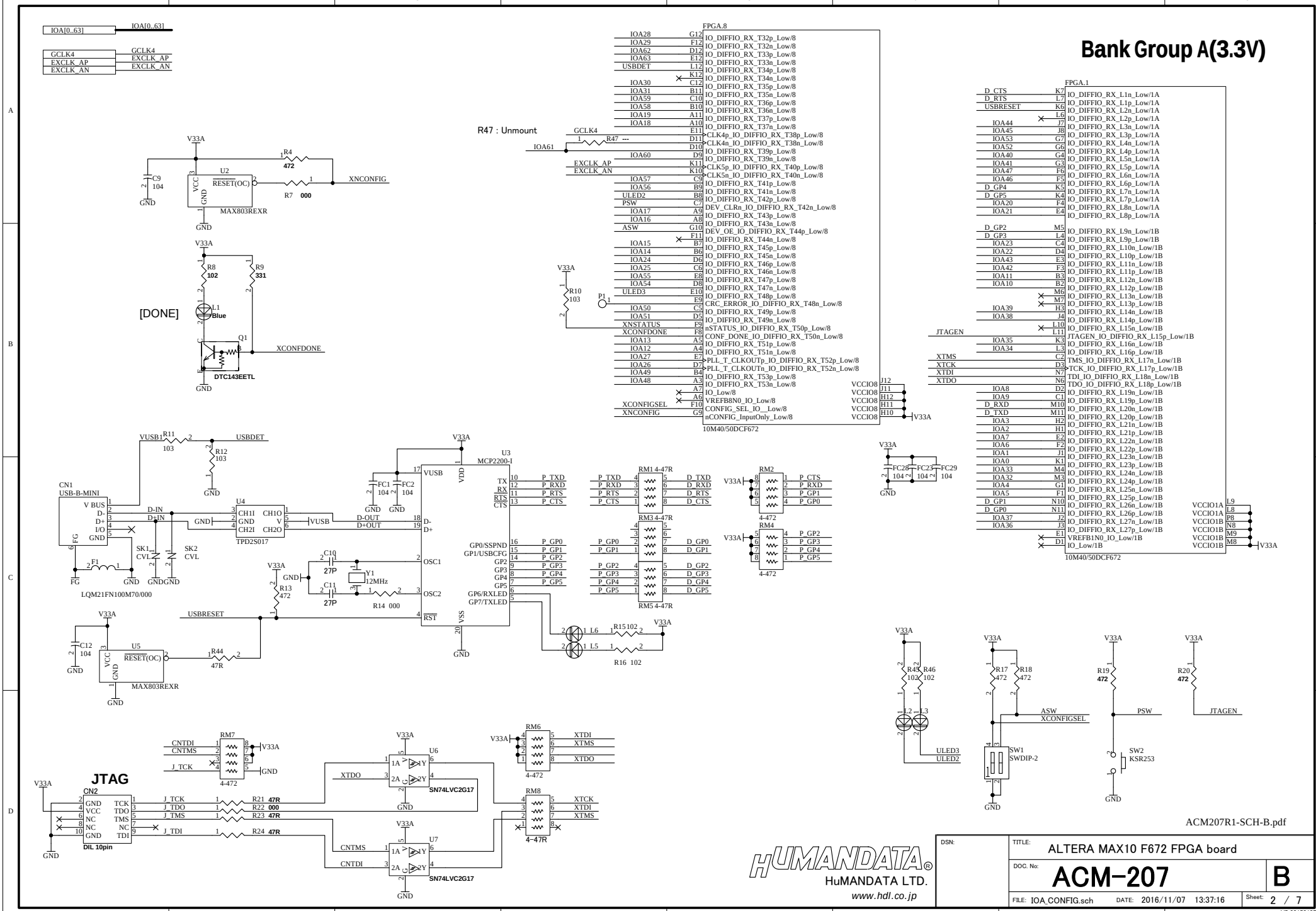
Bank Group A(3.3V)
FPGA.8
FPGA.1
10M40/50DCF672
R47 : Unmount
[DONE]
MAX803REXR
TPD2S017
MCP2200-I
LQM21FN100M70/000
SN74LVC2G17
JTAG
DIL 10pin
ACM207R1-SCH-B.pdf
HUMANDATA
HuMANDATA LTD.
www.hdl.co.jp
DSN:
TITLE: ALTERA MAX10 F672 FPGA board
DOC. No: ACM-207
B
FILE: IOA_CONFIG.sch
DATE: 2016/11/07 13:37:16
Sheet: 2 / 7
V5_20150107

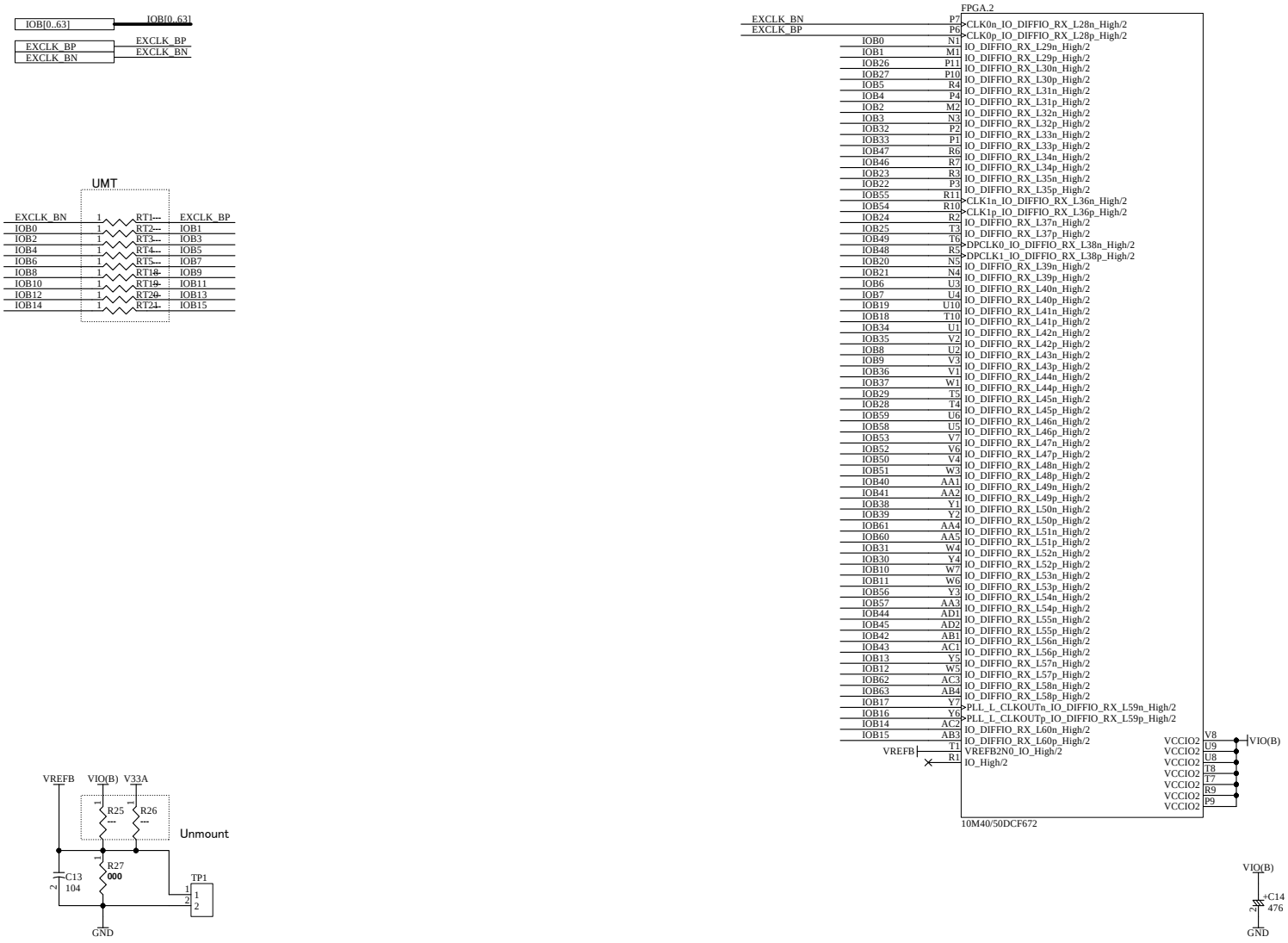

ACM207R1-SCH-B.pdf

Bank Group B

HuMANDATA LTD.
www.hdl.co.jp

DSN:	
TITLE:	ALTERA MAX10 F672 FPGA board
DOC. No:	ACM-207 B
FILE: IOB.sch	DATE: 2016/11/07 13:37:16
Sheet:	3 / 7

V5_20150107

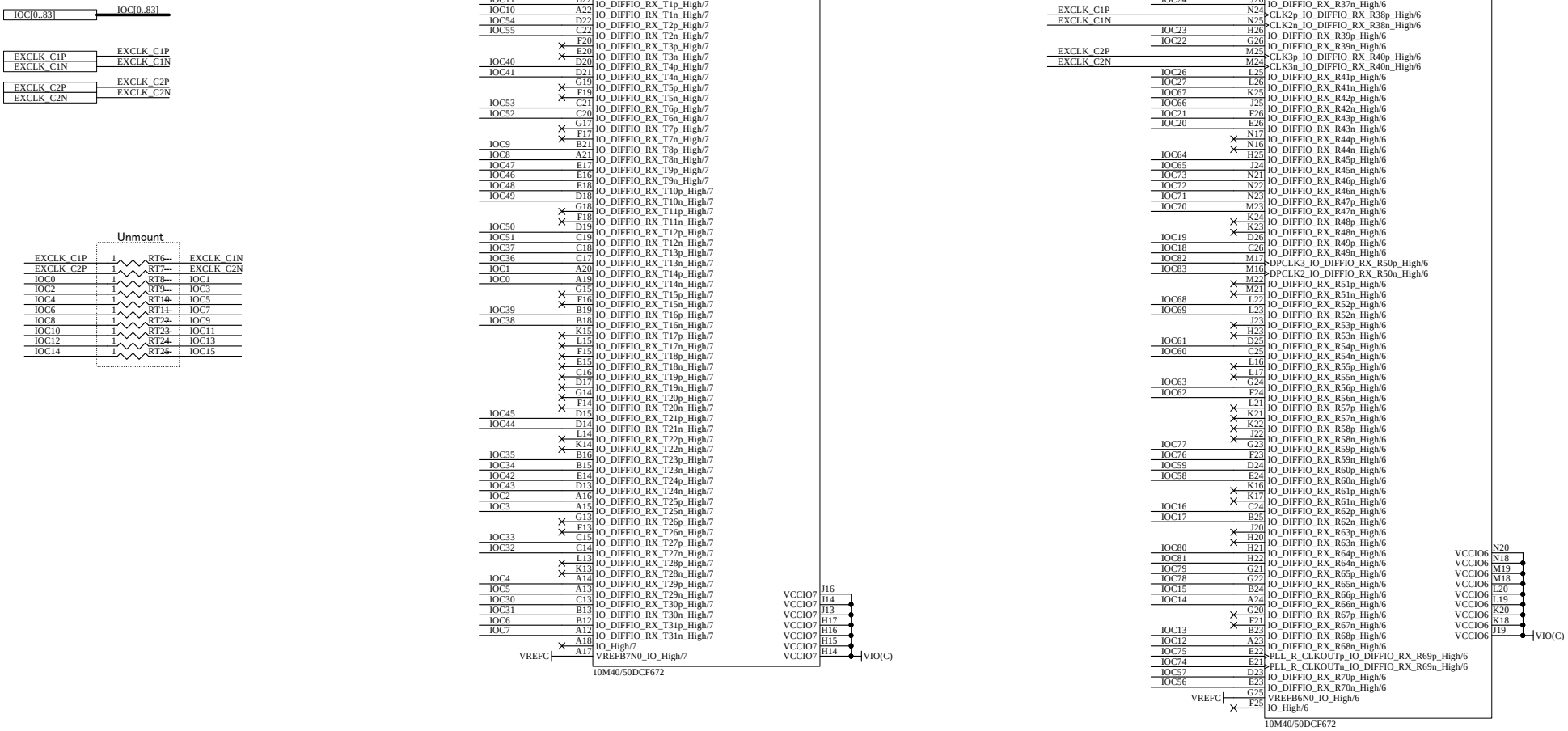

ACM207R1-SCH-B.pdf

Bank Group C

HUMANDATA®
HuMANDATA LTD.
www.hdl.co.jp

DSN:	
TITLE:	ALTERA MAX10 F672 FPGA board
DOC. No:	ACM-207 B
FILE: IOC.sch	DATE: 2016/11/07 13:37:17 Sheet: 4 / 7

V5_20150107

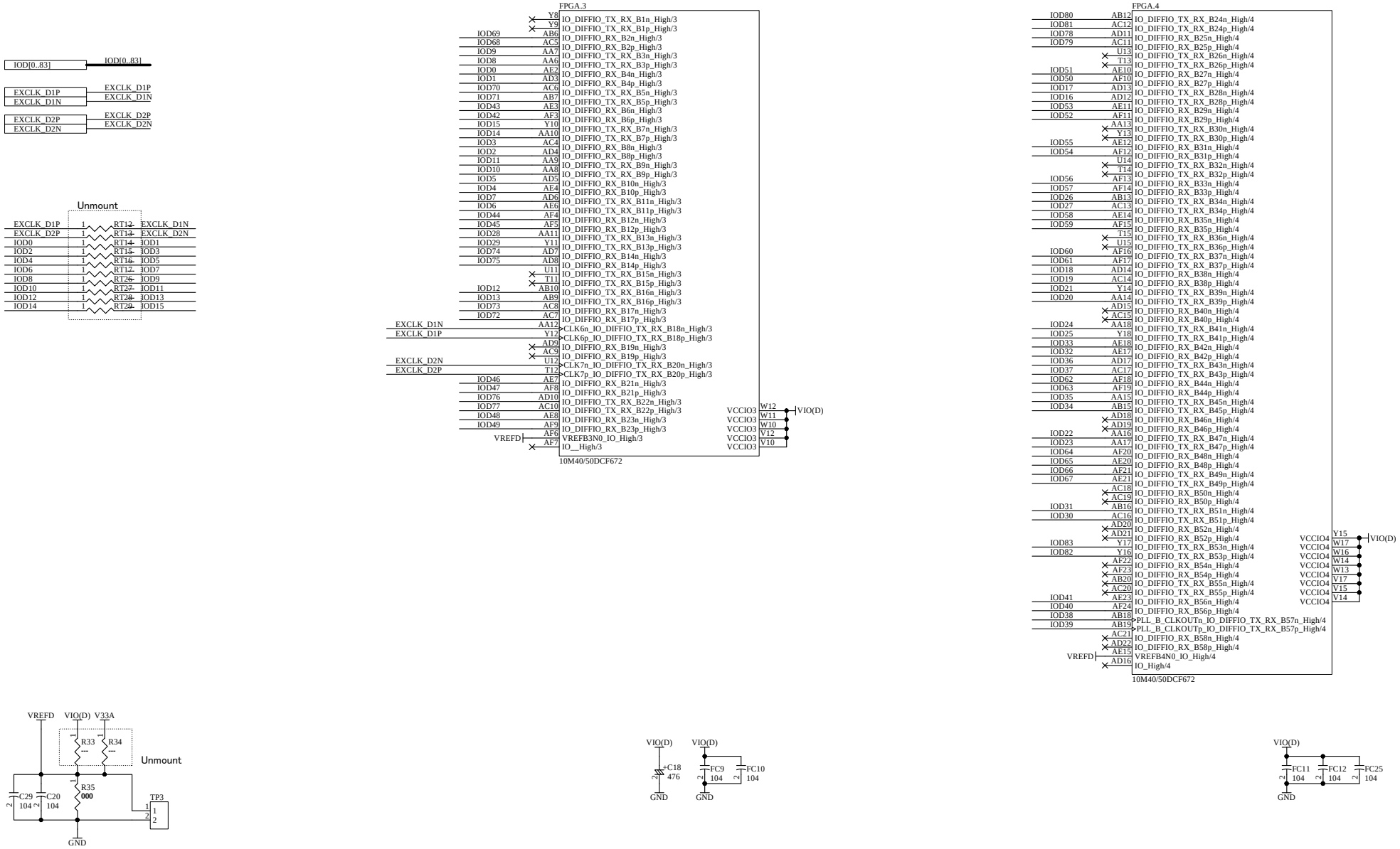

ACM207R1-SCH-B.pdf

Bank Group D

HuMANDATA LTD.
www.hdl.co.jp

DSN:	
TITLE:	ALTERA MAX10 F672 FPGA board
DOC. No:	ACM-207 B
FILE: IOD.sch	DATE: 2016/11/07 13:37:17
Sheet:	5 / 7

V5_20150107

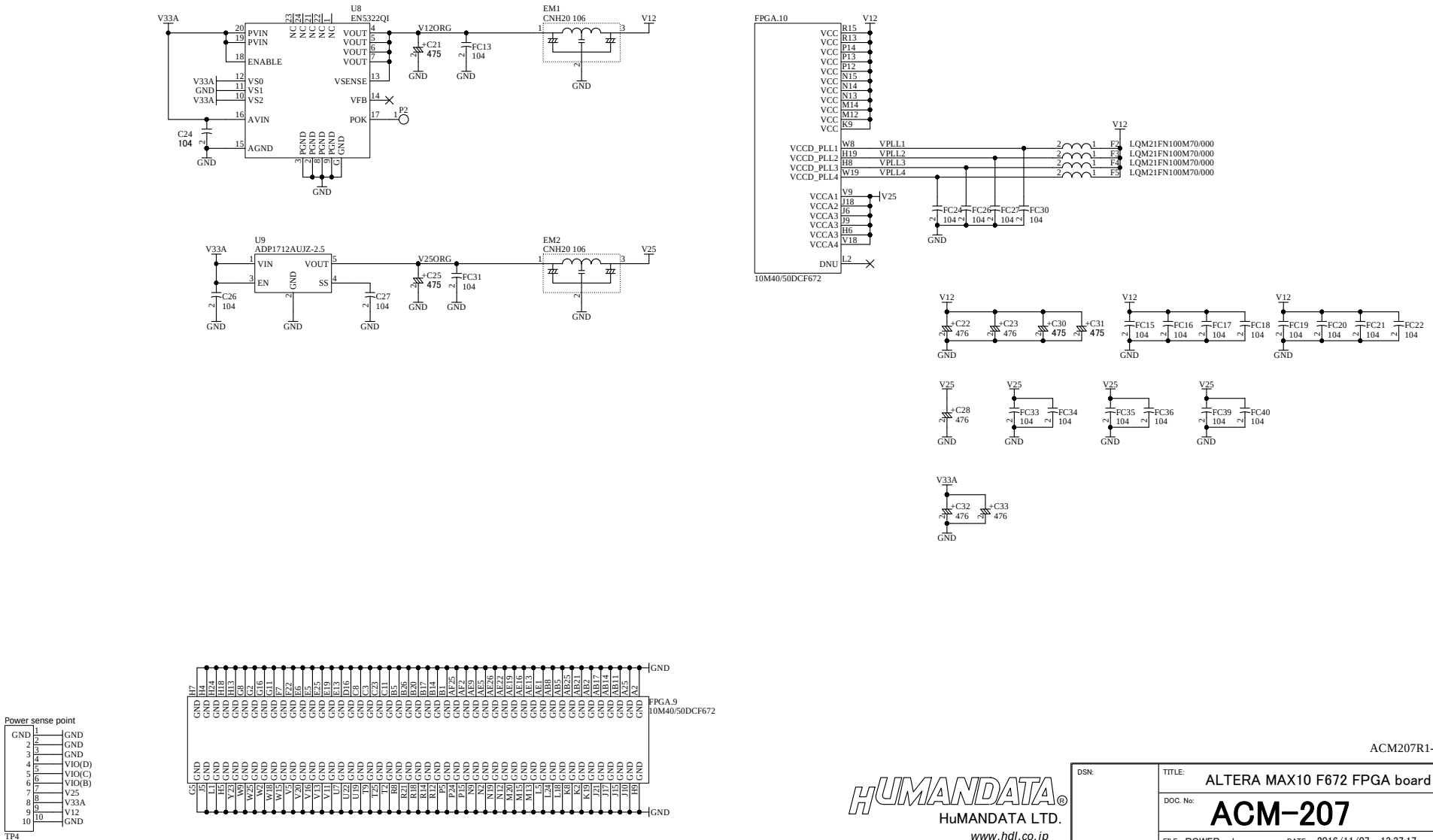

ACM207R1-SCH-B.pdf

HuMANDATA LTD.
www.hdl.co.jp

DSN:	
TITLE:	ALTERA MAX10 F672 FPGA board
DOC. No:	ACM-207 B
FILE: POWER.sch	DATE: 2016/11/07 13:37:17
Sheet:	6 / 7

V5_20150107

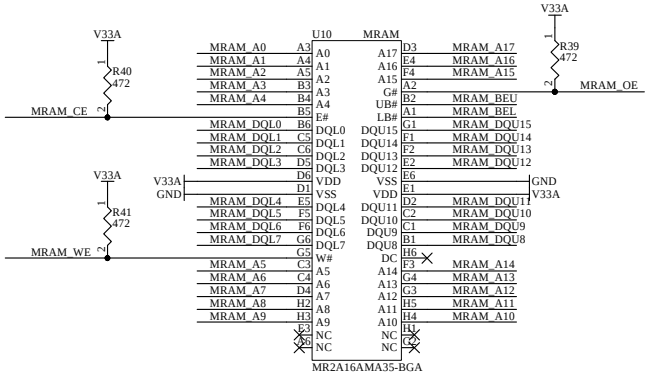

MRAM_A0	MRAM_A17
MRAM_A1	MRAM_A16
MRAM_A2	MRAM_A15
MRAM_A3	MRAM_OE
MRAM_A4	MRAM_BEU
MRAM_CE	MRAM_BEL
MRAM_DQL0	MRAM_DQU15
MRAM_DQL1	MRAM_DQU14
MRAM_DQL2	MRAM_DQU13
MRAM_DQL3	MRAM_DQU12
MRAM_DQL4	MRAM_DQU11
MRAM_DQL5	MRAM_DQU10
MRAM_DQL6	MRAM_DQU9
MRAM_DQL7	MRAM_DQU8
MRAM_WE	
MRAM_A5	MRAM_A14
MRAM_A6	MRAM_A13
MRAM_A7	MRAM_A12
MRAM_A8	MRAM_A11
MRAM_A9	MRAM_A10

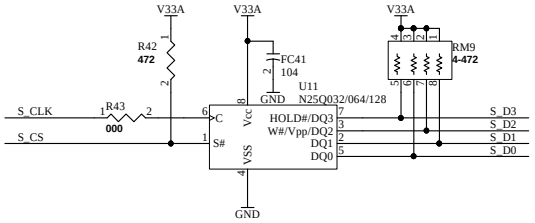

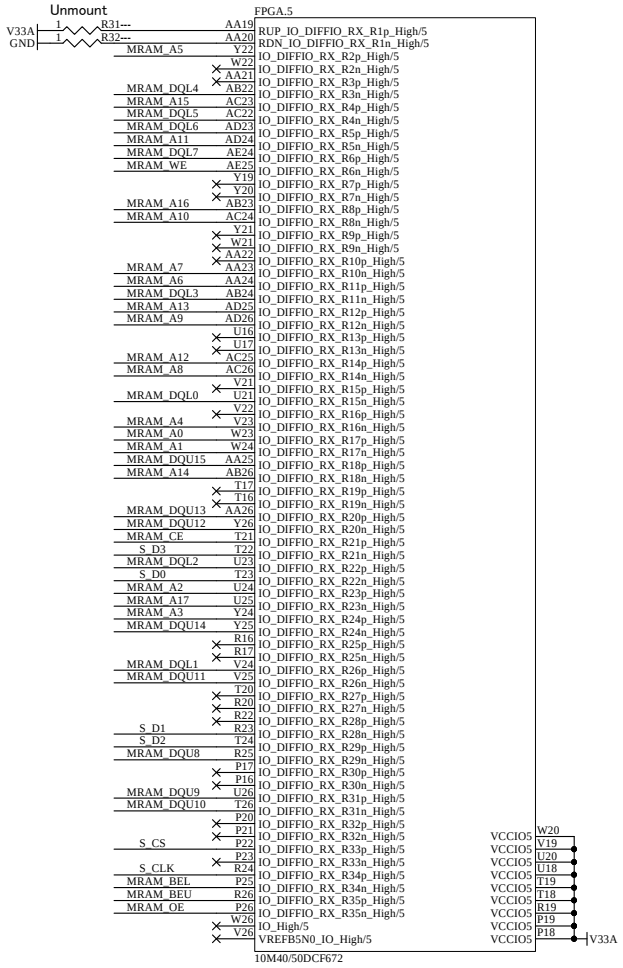

ACM207R1-SCH-B.pdf

HuMANDATA LTD.
www.hdl.co.jp

DSN:	
TITLE:	ALTERA MAX10 F672 FPGA board
DOC. No:	ACM-207 B
FILE: MEMORY.SchDoc	DATE: 2016/11/07 13:37:17
Sheet:	7 / 7

V5_20150107