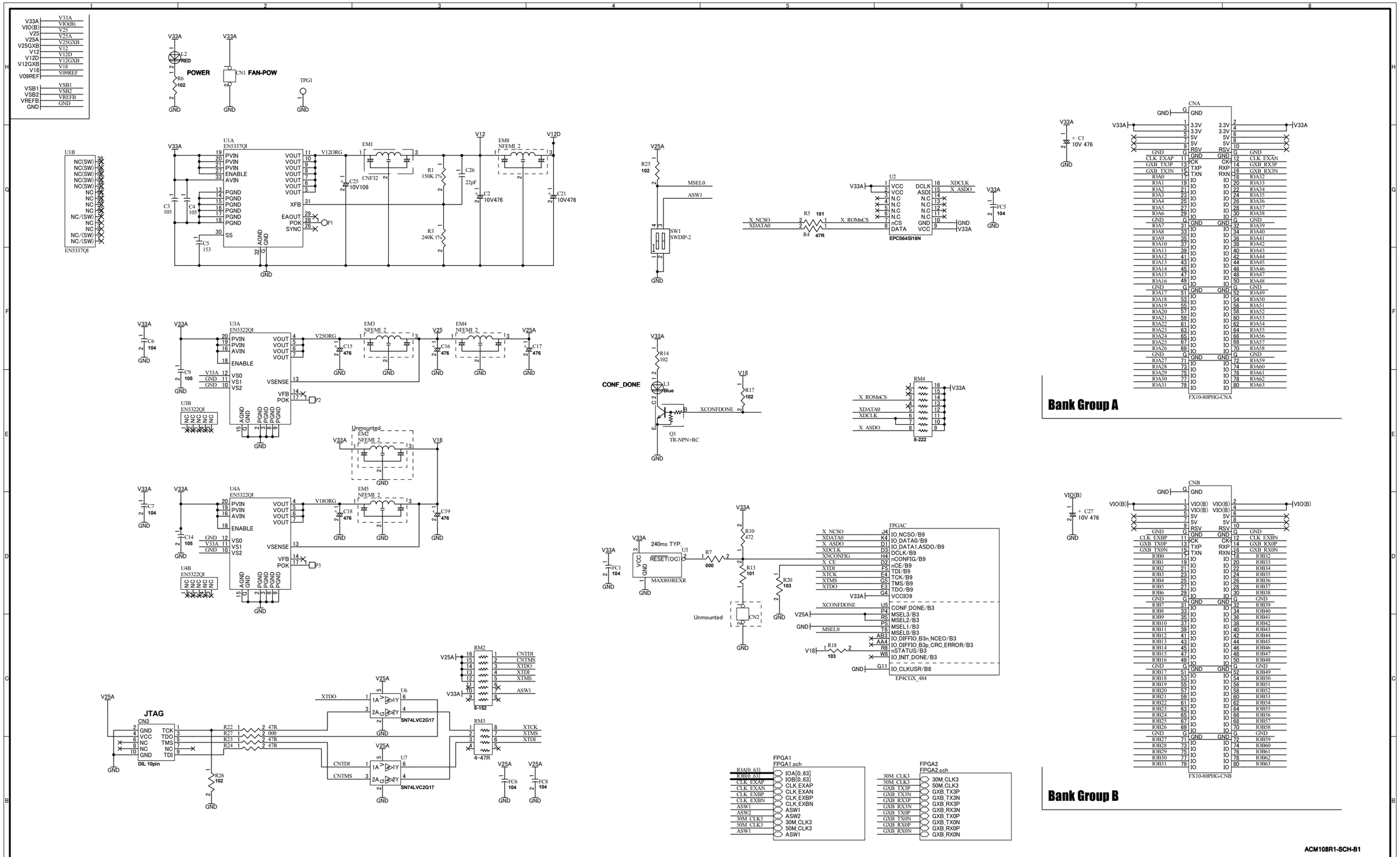

HuMANDATA LTD.
OSAKA JAPAN
www.hdl.co.jp/en/(Global)
www.hdl.co.jp/(Japan)

ALTERA Cyclone IV GX F484 FPGA board

DOC. No.	ACM-108	B1
Date: 21-Nov-2011 13:00:00	File: ACM108B.sch	Sheet 1 of 3

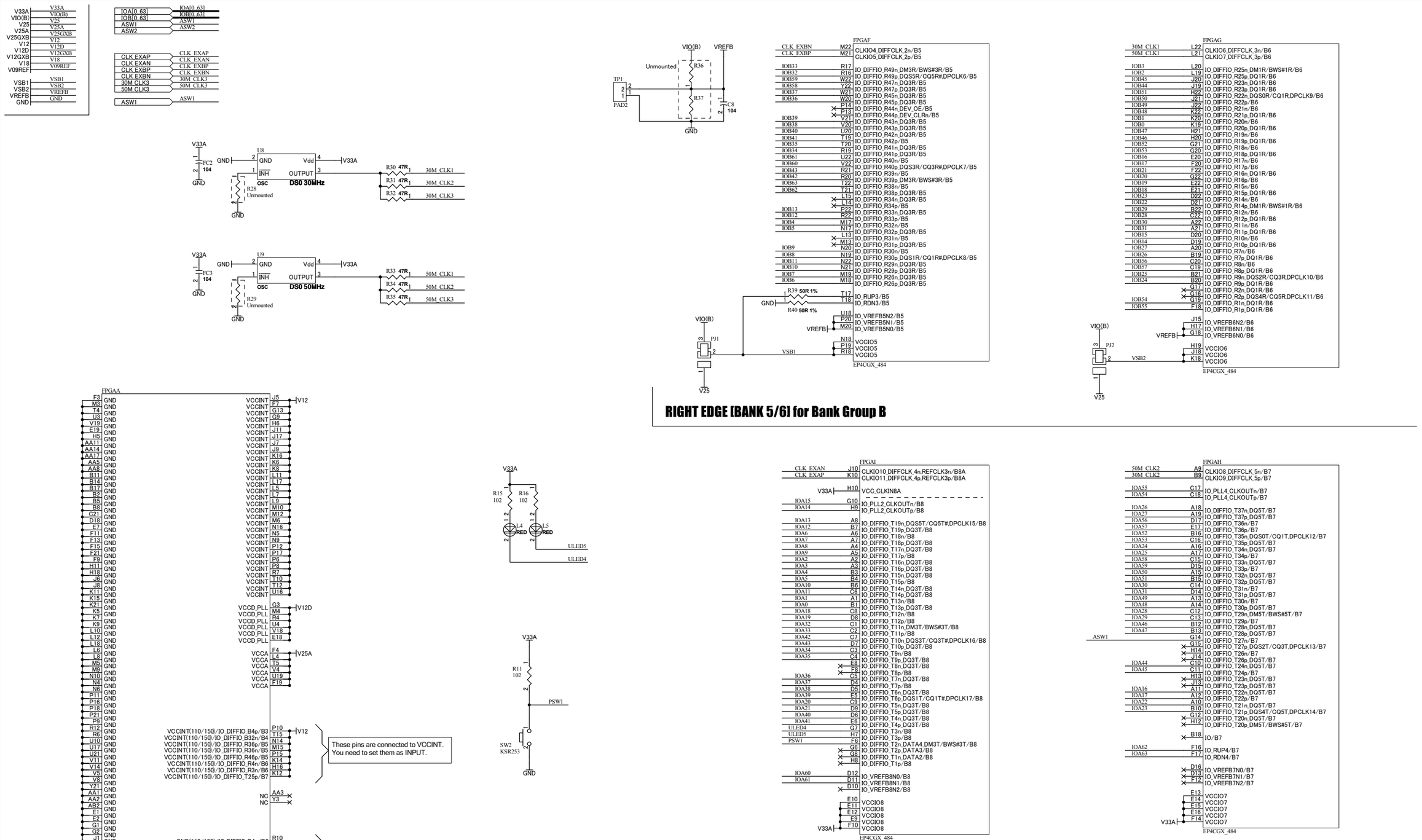

ACM108R1-SCH-B1

HuMANDATA LTD.
OSAKA JAPAN
www.hdl.co.jp/en/(Global)
www.hdl.co.jp/(Japan)

ALTERA Cyclone IV GX F484 FPGA board

Date: 21-Nov-2011 13:00:01	File: FPGA1.sch	Sheet 2 of 3	
	DOC. No.	ACM-108	B1

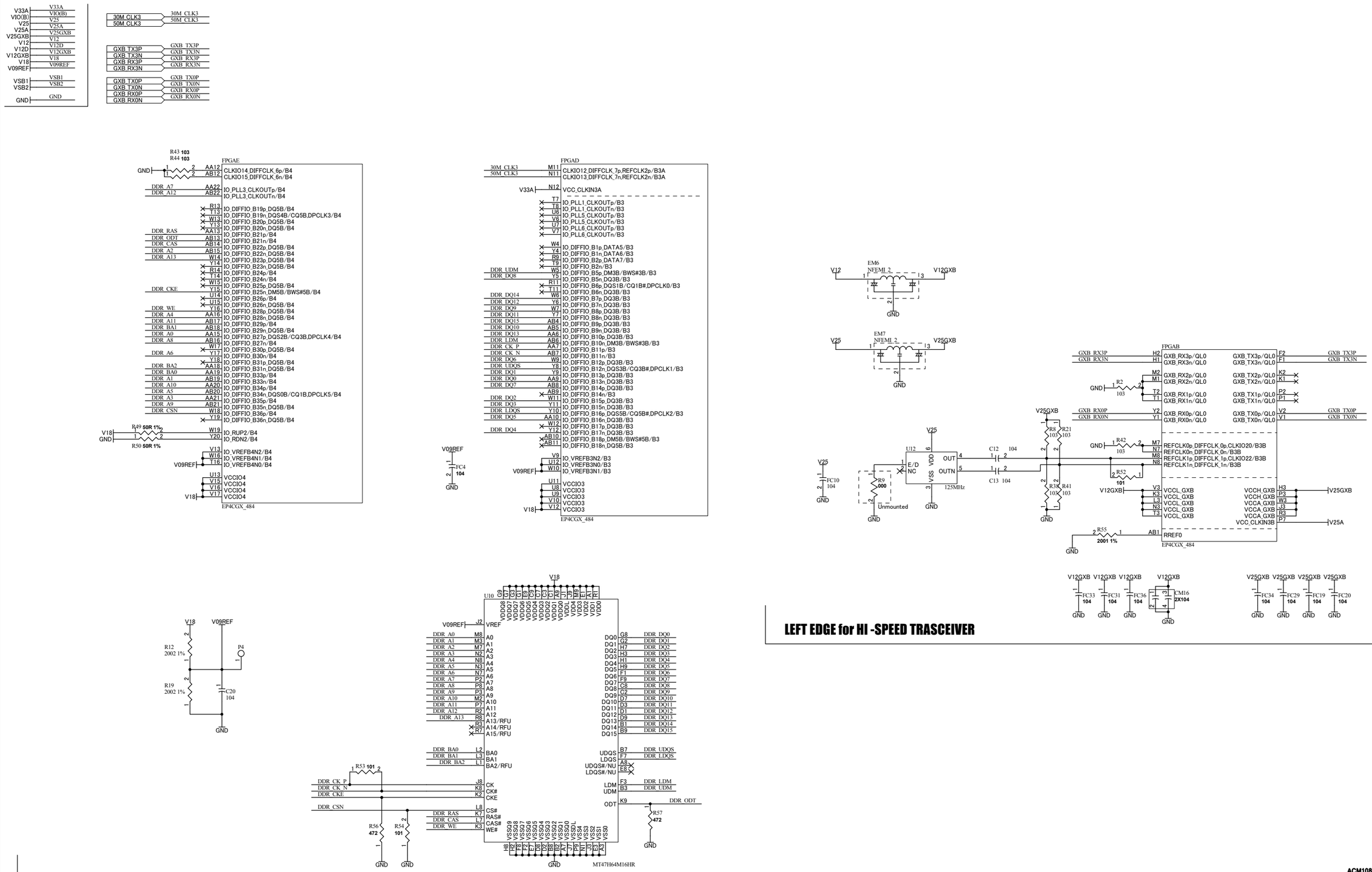

HuMANDATA LTD.
OSAKA JAPAN
www.hdl.co.jp/en/(Global)
www.hdl.co.jp/(Japan)

ALTERA Cyclone IV GX F484 FPGA board

DOC. No.	ACM-108	B1
Date: 21-Nov-2011 13:00:01	File: FPGA2.sch	Sheet 3 of 3