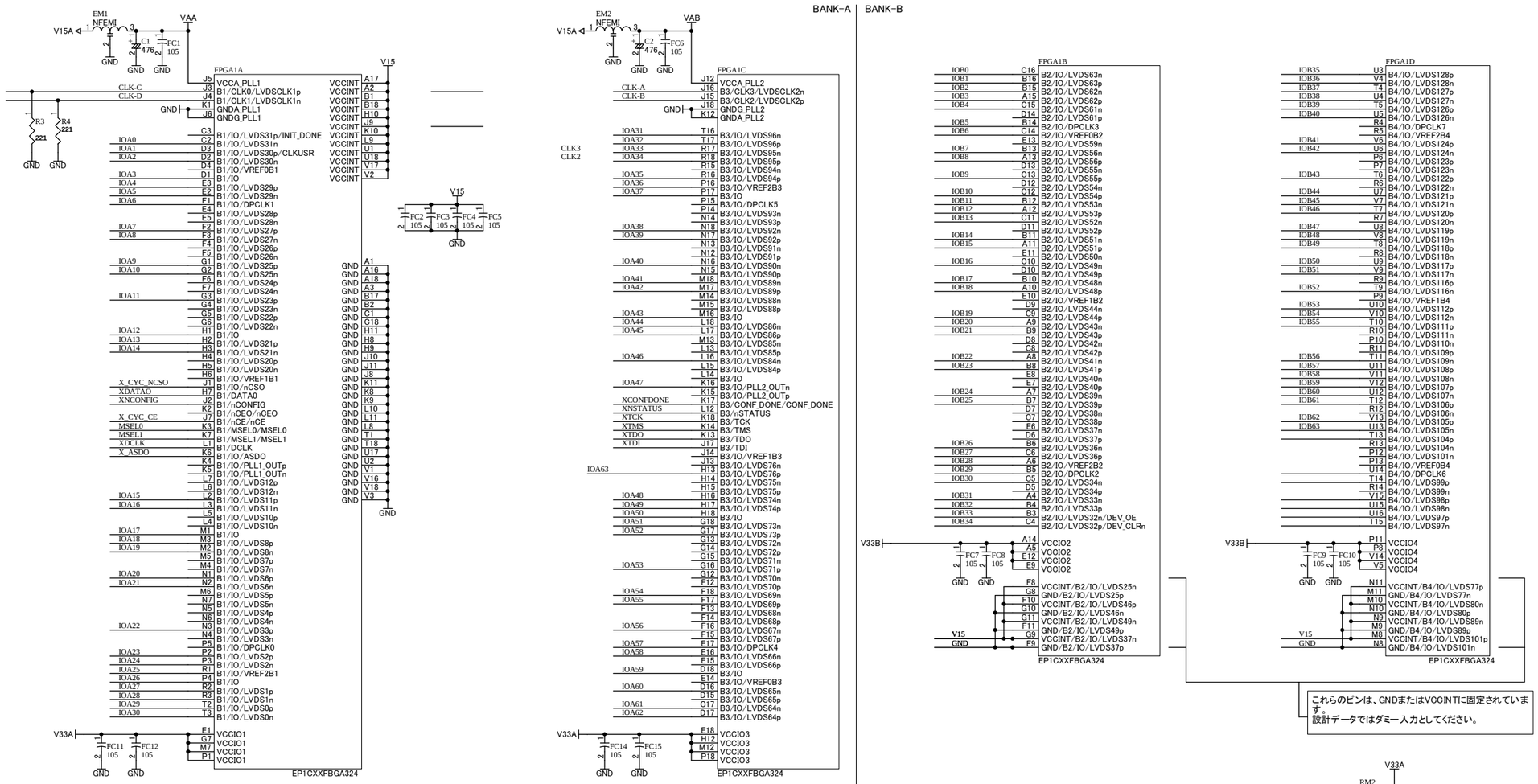

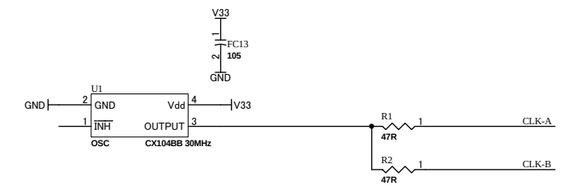

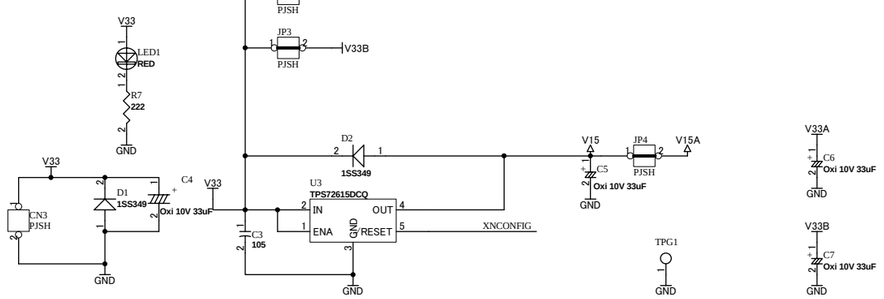

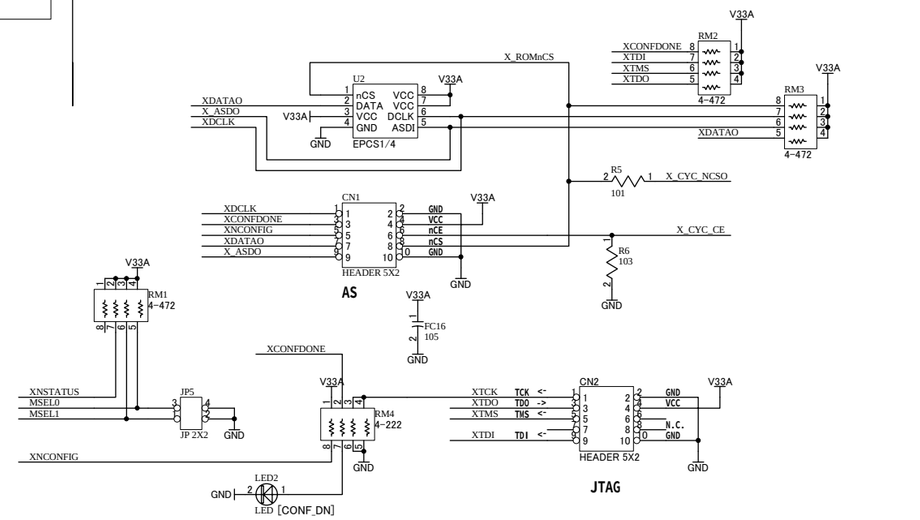

HuMANDATA LTD. OSAKA JAPAN www.hdl.co.jp	2008/06/10	Cyclone Bread Board(HARF)	
		DOC. No. ACM-101	A1
Date: 24-Dec-2009 18:21:20		File: AMC101A.sch	Sheet 1 of 1