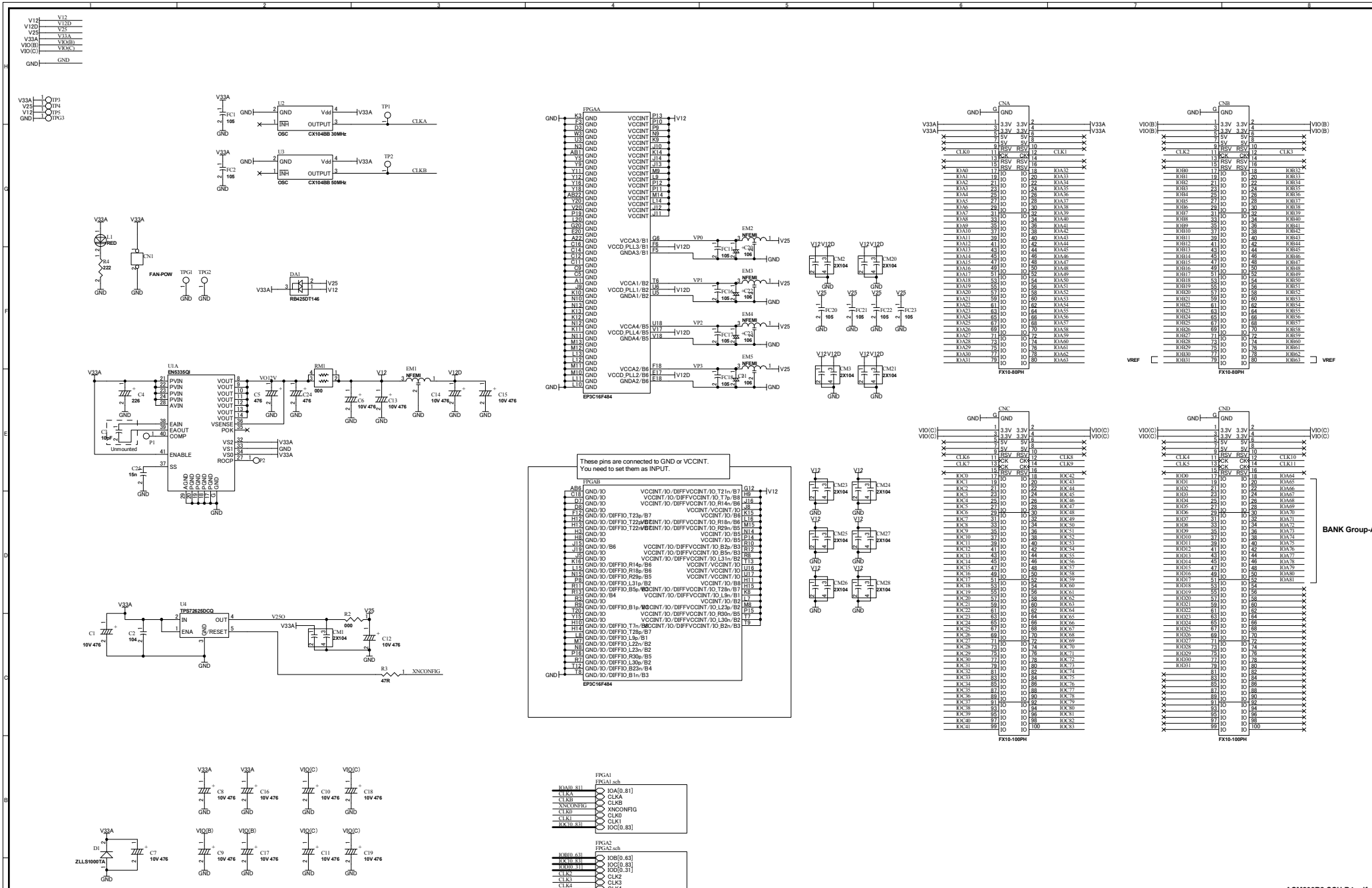

ACM203R2-SCH-B4.pdf

HUMANDATA LTD.
www.hdl.co.jp

DSN:

TITLE: Altera Cyclone III F484 FPGA board

DOC. No: ACM-203 B4

FILE: ACM203B.sch DATE: 18-May-2016 15:55:04 Sheet: 1 / 3

V5.20150107

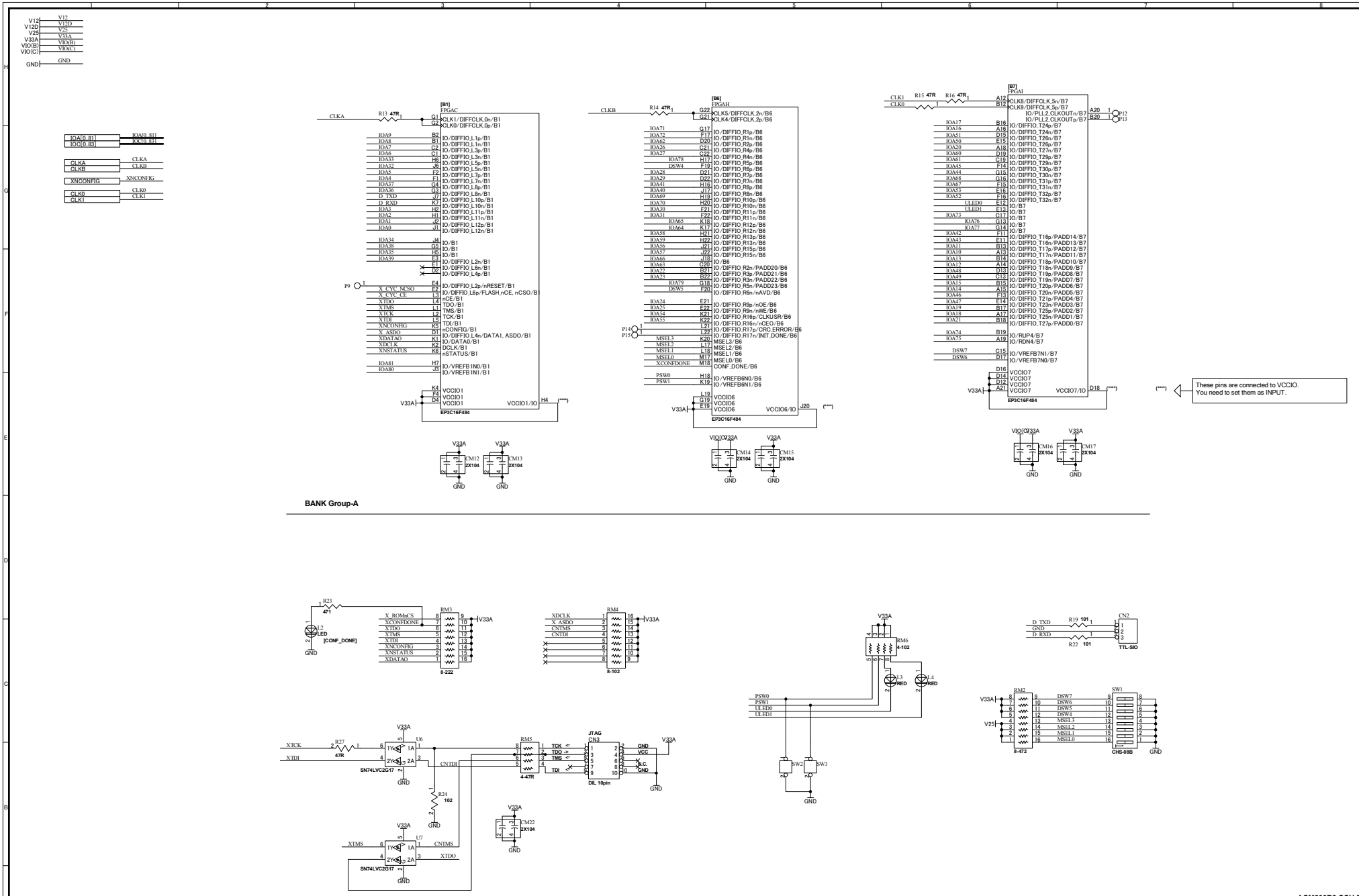

ACM203R2-SCH-B4.pdf

HUMANDATA®
HuMANDATA LTD.
www.hdl.co.jp

DSN:	TITLE: Altera Cyclone III F484 FPGA board
DOC. No:	ACM-203 B4
FILE: FPGA1.sch	DATE: 18-May-2016 15:55:05 Sheet: 2 / 3

V5.20150107

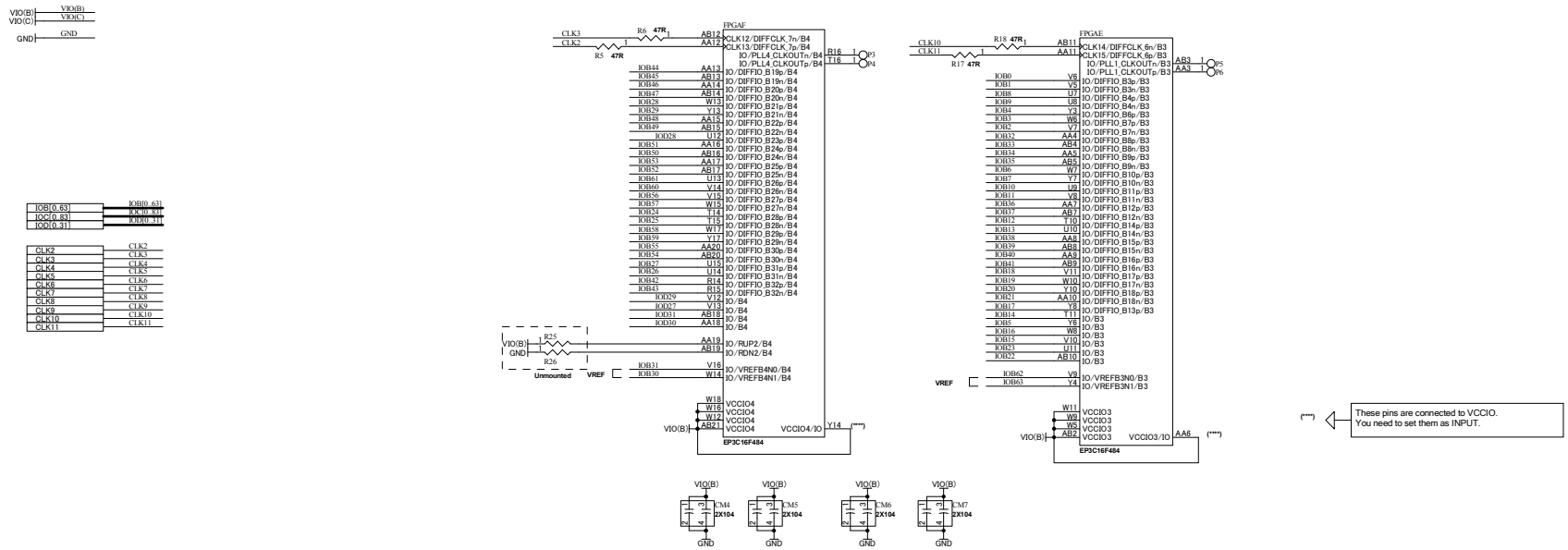

BANK Group-B

BANK Group-C

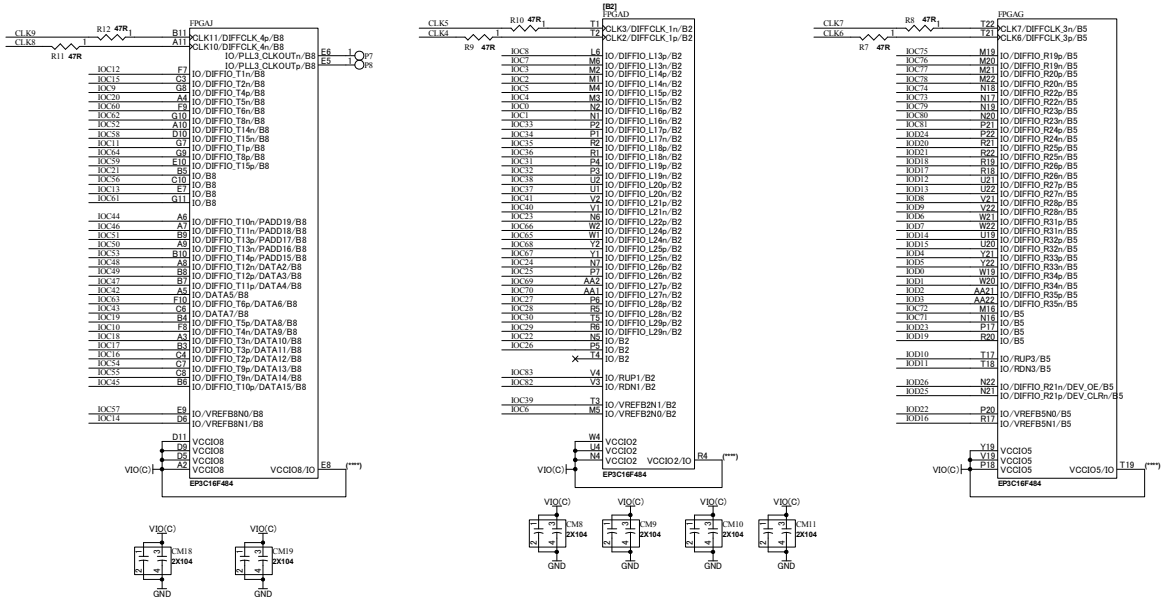

ACM203R2-SCH-B4.pdf

HUMANDATA
HuMANDATA LTD.
www.hdl.co.jp

DSN:	
TITLE:	Altera Cyclone III F484 FPGA board
DOC. No:	ACM-203
	B4
FILE: FPGA2.sch	DATE: 18-May-2016 15:55:05
Sheet:	3 / 3

V5.20150107